BS 5837:2012

BSI Standards Publication

Trees in relation to design, demolition and construction – Recommendations

NO COPYING WITHOUT BSI PERMISSION EXCEPT AS PERMITTED BY COPYRIGHT LAW

raising standards worldwide™

Copyright British Standards Institution
Provided by IHS under license with BSI - Uncontrolled Copy
No reproduction or networking permitted without license from IHS

Licensee=Atkins Global /5975177002, User=Dale, Thomas
Not for Resale, 04/19/2012 06:22:27 MDT

Publishing and copyright information

The BSI copyright notice displayed in this document indicates when the document was last issued.

© The British Standards Institution 2012

Published by BSI Standards Limited 2012

ISBN 978 0 580 69917 7

ICS 65.020.40; 91.020

The following BSI references relate to the work on this standard:
Committee reference B/213
Draft for comment 11/30213641 DC

Publication history

First published January 1980
Second edition, December 1991
Third edition, September 2005
Fourth (present) edition, April 2012

Amendments issued since publication

Date	Text affected

Copyright British Standards Institution
Provided by IHS under license with BSI - Uncontrolled Copy
No reproduction or networking permitted without license from IHS

Licensee=Atkins Global /5975177002, User=Dale, Thomas
Not for Resale, 04/19/2012 06:22:27 MDT

Contents

Foreword *iii*

Introduction *1*

1 Scope *3*
2 Normative references *3*
3 Terms and definitions *3*
4 Feasibility: surveys and preliminary constraints *4*
4.1 General *4*
4.2 Topographical survey *4*
4.3 Soil assessment *5*
4.4 Tree survey *5*
4.5 Tree categorization method *8*
4.6 Root protection area (RPA) *10*
5 Proposals: conception and design *11*
5.1 General *11*
5.2 Constraints posed by existing trees *11*
5.3 Proximity of structures to trees *13*
5.4 Arboricultural impact assessment *14*
5.5 Tree protection plan *15*
5.6 New planting design and associated landscape operations *16*
6 Technical design *18*
6.1 Arboricultural method statement *18*
6.2 Barriers and ground protection *19*
6.3 Site monitoring *23*
7 Demolition and construction in proximity to existing trees *23*
7.1 General *23*
7.2 Avoiding physical damage to the roots during demolition or construction *23*
7.3 Tree protection during demolition *24*
7.4 Permanent hard surfacing within the RPA *25*
7.5 Special engineering for foundations within the RPA *26*
7.6 Subterranean construction within the RPA *27*
7.7 Underground and above-ground utility apparatus *28*
8 Site works, landscape operations and management *29*
8.1 General *29*
8.2 Drainage *29*
8.3 Topsoil quality and amelioration *29*
8.4 Soil compaction and remediation measures *30*
8.5 Use of mulch *30*
8.6 Hard surfaces *31*
8.7 Use of herbicides *32*
8.8 Tree management *32*

Annexes
Annex A (informative) General advice for other interested parties *34*
Annex B (informative) Trees and the planning system *38*
Annex C (normative) Measurement of tree stems *39*
Annex D (normative) Root protection area *40*

Bibliography *41*

List of figures
Figure 1 – The design and construction process and tree care *2*
Figure 2 – Default specification for protective barrier *20*
Figure 3 – Examples of above-ground stabilizing systems *21*
Figure C.1 – Measurement of tree stems *39*

Copyright British Standards Institution
Provided by IHS under license with BSI - Uncontrolled Copy
No reproduction or networking permitted without license from IHS

Licensee=Atkins Global /5975177002, User=Dale, Thomas
Not for Resale, 04/19/2012 06:22:27 MDT

List of tables

Table 1 – Cascade chart for tree quality assessment *9*
Table 2 – Identification of tree categories *10*
Table 3 – Trenchless solutions for differing utility apparatus installation requirements *28*
Table A.1 – Minimum distance between young trees or new planting and structure to avoid direct damage to a structure from future tree growth *35*
Table B.1 – Delivery of tree-related information into the planning system *38*
Table D.1 – Root protection areas *40*

Summary of pages

This document comprises a front cover, an inside front cover, pages i to iv, pages 1 to 42, an inside back cover and a back cover.

Copyright British Standards Institution
Provided by IHS under license with BSI - Uncontrolled Copy
No reproduction or networking permitted without license from IHS
Licensee=Atkins Global /5975177002, User=Dale, Thomas
Not for Resale, 04/19/2012 06:22:27 MDT

Foreword

Publishing information

This British Standard is published by BSI Standards Limited, under licence from The British Standards Institution, and came into effect on 30 April 2012. It was prepared by Technical Committee B/213, *Trees and tree work*. A list of organizations represented on this committee can be obtained on request to its secretary.

Supersession

This British Standard supersedes BS 5837:2005, which is withdrawn.

Information about this document

This is a full revision of the standard, and introduces the following principal changes:

- takes account of current practice regarding planning for the management, protection and planting of trees in the vicinity of structures, and for the protection of structures near trees;
- updates the guidance in relation to building regulations;
- recognizes the contribution that trees make to climate change adaptation.

This British Standard provides recommendations and guidance for arboriculturists, architects, builders, engineers, and landscape architects. It is also expected to be of interest to land managers, contractors, planners, statutory undertakers, surveyors, and all others interested in harmony between trees and development in its broadest sense.

Annex A contains general information which is expected to be of use to developers, builders and engineers.

Use of this document

This British Standard takes the form of guidance and recommendations. It should not be quoted as if it were a specification and particular care should be taken to ensure that claims of compliance are not misleading.

Any user claiming compliance with this British Standard is expected to be able to justify any course of action that deviates from its recommendations.

It has been assumed in the preparation of this British Standard that the execution of its provisions is entrusted to appropriately qualified and experienced people, for whose use it has been produced.

BSI permits the reproduction of BS 5837:2012, Figure 2 and Figure 3, to ensure compliance with the standard (e.g. when seeking planning consent).

Presentational conventions

The provisions in this standard are presented in roman (i.e. upright) type. Its recommendations are expressed in sentences in which the principal auxiliary verb is “should”.

Commentary, explanation and general informative material is presented in smaller italic type, and does not constitute a normative element.

Copyright British Standards Institution
Provided by IHS under license with BSI - Uncontrolled Copy
No reproduction or networking permitted without license from IHS
Licensee=Atkins Global /5975177002, User=Dale, Thomas
Not for Resale, 04/19/2012 06:22:27 MDT

Contractual and legal considerations

This publication does not purport to include all the necessary provisions of a contract. Users are responsible for its correct application.

Compliance with a British Standard cannot confer immunity from legal obligations.

Trees are given special consideration under the statutory planning system and in civil case law, and their protection can change with time. It is advisable to seek expert advice on the legal implications for any plans or projects that fall within the scope of this British Standard.

Copyright British Standards Institution
Provided by IHS under license with BSI - Uncontrolled Copy
No reproduction or networking permitted without license from IHS
Licensee=Atkins Global /5975177002, User=Dale, Thomas
Not for Resale, 04/19/2012 06:22:27 MDT

Introduction

Trees can offer many benefits, including:

- providing visual amenity, softening or complementing the effect of the built environment, and adding maturity to new developments;
- displaying seasonal change and providing opportunities for wildlife in built-up areas;
- making places more comfortable in tangible ways by contributing screening and shade, reducing wind speed and turbulence, intercepting snow and rainfall, and reducing glare.

Trees are also important elements of green infrastructure, contributing to urban cooling through evapo-transpiration and providing micro-climatic effects that can reduce energy demands in buildings. They therefore represent a key resource that can significantly contribute to climate change adaptation.

Existing trees are an important factor on construction sites, whether on or near the working areas, and trees are a material consideration in the UK planning system (see Annex B). This British Standard is intended to assist decision-making with regard to existing and proposed trees in the context of design, demolition and construction. Root systems, stems and canopies, with allowance for future movement and growth, need to be taken into account in all projects, including those that do not require planning permission. The space required for any proposed new trees to become established is an important consideration.

During their lifetime, trees will be vulnerable to disturbance, injury, environmental changes, pests and diseases. Construction work often exerts pressures on existing trees, as do changes in their immediate environment following the construction. A tree that has taken many decades to reach maturity can be damaged irreparably in a few minutes by actions that might be unwitting, negligent or wilful (see Annex A). The early provision of physical protection from damage is therefore critical.

Where tree retention or planting is proposed in conjunction with nearby construction, the objective should be to achieve a harmonious relationship between trees and structures that can be sustained in the long term. The good practice recommended in this British Standard is intended to assist in achieving this objective.

The standard follows a logical sequence of events that has tree care at the heart of the process. This is summarized as a flow diagram in Figure 1. The full sequence of events might not be applicable in all instances; for example, a planning application for a conservatory might not require the level of detail that needs to accompany a planning application for the development of a site with one or more dwellings.

Copyright British Standards Institution
Provided by IHS under license with BSI - Uncontrolled Copy
No reproduction or networking permitted without license from IHS
Licensee=Atkins Global /5975177002, User=Dale, Thomas
Not for Resale, 04/19/2012 06:22:27 MDT

Figure 1 **The design and construction process and tree care**

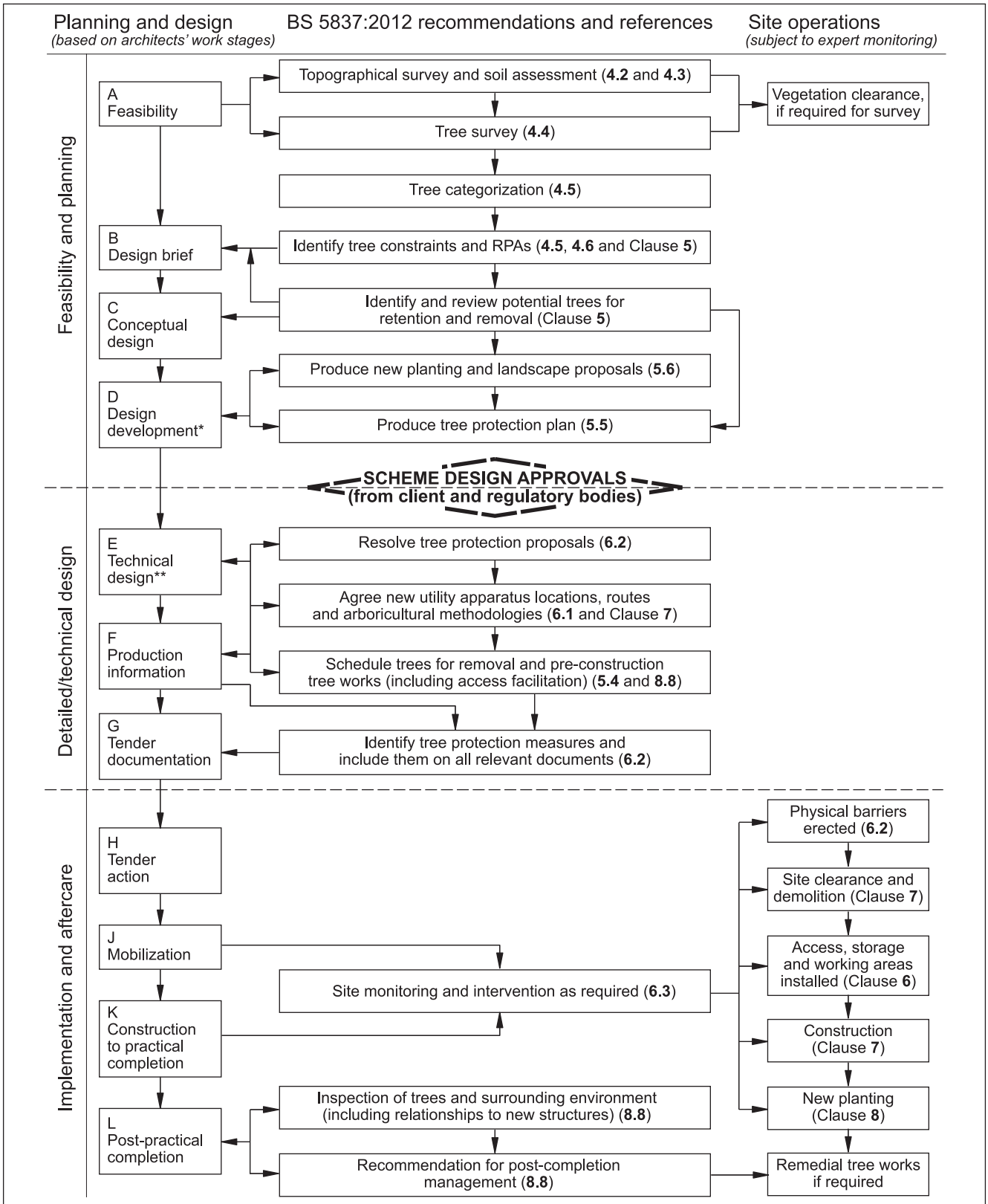

** The design development stage D in particular is an iterative process, responding to and resolving constraints as they emerge but, once completed, there needs to be a high level of certainty for proposed outcomes.*

*** See Commentary on Clause **6**.*

Copyright British Standards Institution
Provided by IHS under license with BSI - Uncontrolled Copy
No reproduction or networking permitted without license from IHS
Licensee=Atkins Global /5975177002, User=Dale, Thomas
Not for Resale, 04/19/2012 06:22:27 MDT

1 Scope

This British Standard gives recommendations and guidance on the relationship between trees and design, demolition and construction processes.

It sets out the principles and procedures to be applied to achieve a harmonious and sustainable relationship between trees and structures.

The standard is applicable whether or not planning permission is required.

2 Normative references

The following documents, in whole or in part, are normatively referenced in this document and are indispensable for its application. For dated references, only the edition cited applies. For undated references, the latest edition of the referenced document (including any amendments) applies.

Standards publications

BS 3998:2010, *Tree work – Recommendations*

Other publications

[N1] NATIONAL JOINT UTILITIES GROUP (NJUG). *Guidelines for the planning, installation and maintenance of utility apparatus in proximity to trees*. Volume 4, issue 2. London: NJUG, 2007.

3 Terms and definitions

For the purposes of this British Standard, the following terms and definitions apply.

3.1 access facilitation pruning
one-off tree pruning operation, the nature and effects of which are without significant adverse impact on tree physiology or amenity value, which is directly necessary to provide access for operations on site

3.2 arboricultural method statement
methodology for the implementation of any aspect of development that is within the root protection area (**3.7**), or has the potential to result in loss of or damage to a tree to be retained

3.3 arboriculturist
person who has, through relevant education, training and experience, gained expertise in the field of trees in relation to construction

3.4 competent person
person who has training and experience relevant to the matter being addressed and an understanding of the requirements of the particular task being approached

NOTE A competent person is expected to be able to advise on the best means by which the recommendations of this British Standard may be implemented.

3.5 construction
site-based operations with the potential to affect existing trees

3.6 construction exclusion zone
area based on the root protection area (**3.7**) from which access is prohibited for the duration of a project

Copyright British Standards Institution
Provided by IHS under license with BSI - Uncontrolled Copy
No reproduction or networking permitted without license from IHS
Licensee=Atkins Global /5975177002, User=Dale, Thomas
Not for Resale, 04/19/2012 06:22:27 MDT

3.7 root protection area (RPA)
layout design tool indicating the minimum area around a tree deemed to contain sufficient roots and rooting volume to maintain the tree's viability, and where the protection of the roots and soil structure is treated as a priority

3.8 service
any above- or below-ground structure or apparatus required for utility provision

NOTE Examples include drainage, gas supplies, ground source heat pumps, CCTV and satellite communications.

3.9 stem
principal above-ground structural component(s) of a tree that supports its branches

3.10 structure
manufactured object, such as a building, carriageway, path, wall, service run, and built or excavated earthwork

3.11 tree protection plan
scale drawing, informed by descriptive text where necessary, based upon the finalized proposals, showing trees for retention and illustrating the tree and landscape protection measures

3.12 veteran tree
tree that, by recognized criteria, shows features of biological, cultural or aesthetic value that are characteristic of, but not exclusive to, individuals surviving beyond the typical age range for the species concerned

NOTE These characteristics might typically include a large girth, signs of crown retrenchment and hollowing of the stem.

[BS 3998:2010]

4 Feasibility: surveys and preliminary constraints

4.1 General

All plans should be to scale and should state to which ISO A paper size the scale relates, as well as showing a scale bar and a north point. When plans are drawn in colour, they should carry the following statement (or similar): "The original of this drawing was produced in colour – a monochrome copy should not be relied upon".

4.2 Topographical survey

4.2.1 An accurately measured topographical survey should be undertaken showing all relevant features.

NOTE 1 A method of carrying out topographical surveys is given in RICS specification Surveys of land buildings and utility services at scales of 1:500 and larger *[1].*

NOTE 2 Prior to commencing the topographical survey, it might be appropriate to seek the advice of an arboriculturist on its scope, particularly where there are woodlands or substantial tree groups present.

4.2.2 Where clearance of undergrowth is essential to facilitate the survey process, it is important that this is undertaken in consultation with relevant professionals, in order to avoid damage to, for example, arboricultural, archaeological or ecological features. Where appropriate, this should include expert attendance on site during the works.

Copyright British Standards Institution
Provided by IHS under license with BSI - Uncontrolled Copy
No reproduction or networking permitted without license from IHS
Licensee=Atkins Global /5975177002, User=Dale, Thomas
Not for Resale, 04/19/2012 06:22:27 MDT

4.2.3 The survey should be made available as scale drawings and preferably also in a commonly recognized digital format. It should be used to inform all design and planning decisions.

4.2.4 The survey should record:

a) spot levels at the base of trees and throughout the site at an interval appropriate to meet design requirements, recorded as a grid and interpolated as contours, ensuring that any abrupt changes, embankments, ditch inverts and retaining features are recorded;

b) the position of all trees within the site with a stem diameter of 75 mm or more (see Note), measured at 1.5 m above highest adjacent ground level;

NOTE In the case of woodlands or substantial tree groups, only individual trees with stem diameters greater than 150 mm usually need be plotted.

c) the position of trees with an estimated stem diameter of 75 mm or more that overhang the site or are located beyond the site boundaries within a distance of up to 12 times their estimated stem diameter;

d) for individual trees, the crown spread taken at four cardinal points; for woodlands or substantial tree groups, the overall extent of the canopy;

e) the extent, basal ground levels and height of shrub masses, hedges, hedgerows and stumps;

f) other relevant landscape features and artefacts, such as streams, buildings and other structures, boundary features and means of enclosure, trenching scars near to trees, and overhead and underground utility apparatus, including drainage runs with manholes and invert levels.

4.3 Soil assessment

4.3.1 A soil assessment should be undertaken by a competent person to inform any decisions relating to:

- the root protection area (RPA);
- tree protection;
- new planting design; and
- foundation design to take account of retained, removed and new trees.

4.3.2 The assessment should determine whether the soil is shrinkable. If it is, trees and other vegetation have the potential to cause indirect damage to structures (see Annex A). In such cases, desiccation assessments should be carried out at a specialist laboratory to check the extent to which existing vegetation has dehydrated the soil.

4.3.3 Soil structure, composition and pH should be included in the assessment for the purpose of designing new planting and landscape proposals.

4.4 Tree survey

4.4.1 Timing

4.4.1.1 A tree survey should be undertaken by an arboriculturist to record information about the trees on or adjacent to a site. The results of the tree survey, including material constraints arising from existing trees that merit retention, should be used (along with any other relevant baseline data) to inform feasibility studies and design options. For this reason, the tree survey should be completed and made available to designers prior to and/or independently of any specific proposals for development.

Copyright British Standards Institution
Provided by IHS under license with BSI - Uncontrolled Copy
No reproduction or networking permitted without license from IHS
Licensee=Atkins Global /5975177002, User=Dale, Thomas
Not for Resale, 04/19/2012 06:22:27 MDT

4.4.1.2 Tree surveys undertaken after a detailed design has been prepared can identify significant conflicts: in such cases, the nature of and need for the proposed development should be set against the quality and values of affected trees. The extent to which the design can be modified to accommodate those trees meriting retention (see Clause **5**) should be carefully considered.

4.4.1.3 Where proposed development is subject to planning control, a tree survey should be regarded as an important part of the evidence base underpinning the design and access statement. Accordingly, local planning authorities should not rely on planning conditions to secure a tree survey (see Annex B), as by this stage in the formal planning process its findings might not be capable of influencing design, potentially resulting in uncontrolled arboricultural impacts.

NOTE The risk of project delay due to material constraints being identified only at a late stage is avoided by the early procurement of a tree survey.

4.4.2 Parameters

NOTE Prior to a full tree survey, a pre-purchase arboricultural site appraisal can be useful to inform likely developable area.

4.4.2.1 The tree survey should include all trees included in the topographical survey (see **4.2**), as well as any that might have been missed [e.g. on shrinkable soils, additional off-site trees that could have an effect on foundation design (see Annex A)]. The trees should be sequentially numbered and, where appropriate, tagged, with the tags being placed as high as is convenient on the stem of each tree.

4.4.2.2 Individual trees, groups of trees and woodlands should be assessed for their quality and benefits within the context of proposed development, in a transparent, understandable and systematic way. The quality of each tree or group of trees should be recorded by allocating it to one of four categories (see **4.5**). The categories should be differentiated on the tree survey plan by colours (see **4.5** and Tables 1 and 2), and/or by suffixing the category adjacent to the tree identification number on the tree survey plan (e.g. 217-A, 218-C etc; see **4.4.2.1**).

4.4.2.3 Trees growing as groups or woodland should be identified and assessed as such where the arboriculturist determines that this is appropriate. However, an assessment of individuals within any group should still be undertaken if there is a need to differentiate between them, e.g. in order to highlight significant variation in attributes (including physiological or structural condition).

*NOTE The term "group" is intended to identify trees that form cohesive arboricultural features either aerodynamically (e.g. trees that provide companion shelter), visually (e.g. avenues or screens) or culturally, including for biodiversity (e.g. parkland or wood pasture), in respect of each of the three subcategories (see **4.5**).*

4.4.2.4 The categorization of a group or woodland can reflect a future potential that is contingent on appropriate management being undertaken to promote the development of the better specimens, based upon established arboricultural and silvicultural principles. Such management requirements should be noted under "general observations" within the schedule and included within the post-development management plan (see **8.8.3**).

NOTE Typically, the works will need to be phased over a number of years so as to maintain the necessary degree of companion shelter.

Copyright British Standards Institution
Provided by IHS under license with BSI - Uncontrolled Copy
No reproduction or networking permitted without license from IHS
Licensee=Atkins Global /5975177002, User=Dale, Thomas
Not for Resale, 04/19/2012 06:22:27 MDT

4.4.2.5 A schedule to the survey should list all the trees or groups of trees. The following information should be recorded (see **4.4.2.6** for measurement conventions):

a) sequential reference number (to be recorded on the tree survey plan);

b) species listed by common name, with a key provided to scientific names;

c) height;

d) stem diameter, measured in accordance with Annex C;

e) branch spread, taken as a minimum at the four cardinal points, to derive an accurate representation of the crown (to be plotted on the tree survey plan);

f) existing height above ground level of:

   1) first significant branch and direction of growth (e.g. 2.4-N);

   2) canopy,

   to inform on ground clearance, crown/stem ratio and shading;

g) life stage (e.g. young, semi-mature, early mature, mature, over-mature);

h) general observations, particularly of structural and/or physiological condition (e.g. the presence of any decay and physical defect), and/or preliminary management recommendations;

i) estimated remaining contribution, in years (<10, 10+, 20+, 40+);

j) category U or A to C grading (see **4.5** and Tables 1 and 2), to be recorded on the tree survey plan.

NOTE 1 It is not always practical or necessary to record branch spread for every tree within a group or woodland.

NOTE 2 In some cases, layout design might be aided by the arboriculturist providing data on future tree height and crown spread.

4.4.2.6 The measurement conventions should be as follows.

a) height, crown spread and crown clearance should be recorded to the nearest half metre (crown spread should be rounded up) for dimensions up to 10 m and the nearest whole metre for dimensions over 10 m;

b) stem diameter should be recorded in millimetres, rounded to the nearest 10 mm (0.01 m);

c) estimated dimensions (e.g. for off-site or otherwise inaccessible trees where accurate data cannot be recovered) should be clearly identified as such (e.g. suffixed with a "#").

4.4.2.7 Relevant details of shrub masses, hedges, hedgerows and stumps are expected to have been recorded during the topographical survey (see **4.2**), but should be checked by the arboriculturist for inclusion in the tree survey. In the case of regularly maintained domestic hedges and the majority of shrub masses, it will normally be sufficient to record their height and species on the tree survey plan or note these in the schedule.

4.4.2.8 Hedgerows and substantial internal or boundary hedges (including evergreen screens) should be recorded in a similar fashion to groups, with the lateral spread and average (or maximum and minimum) height and stem diameter ranges recorded, to allow the potential constraints associated with the features to be fully assessed. All woody species present should be recorded. Where woody plants are present within a hedgerow that are significantly different in character from the remainder of it, these should be identified and recorded separately, especially where they comprise distinct trees.

Copyright British Standards Institution
Provided by IHS under license with BSI - Uncontrolled Copy
No reproduction or networking permitted without license from IHS
Licensee=Atkins Global /5975177002, User=Dale, Thomas
Not for Resale, 04/19/2012 06:22:27 MDT

NOTE Attention is drawn to the Hedgerows Regulations 1997 [2].

4.4.2.9 On shrinkable soils (known or suspected), if it is evident that trees or substantial stems have been removed from a hedgerow, this should be recorded, along with any apparent signs of past management, such as laying or significant height reduction. Such information can be of particular relevance to foundation design, where the current species composition and dimensions might not reflect the previous influence of a hedgerow on ground moisture levels.

4.5 Tree categorization method

4.5.1 As part of the tree survey (see **4.4**), trees should be categorized using the criteria shown in Table 1.

NOTE The means of identifying each category on the tree survey plan is shown in Table 2.

4.5.2 The purpose of the tree categorization method, which should be applied by an arboriculturist, is to identify the quality and value (in a non-fiscal sense) of the existing tree stock, allowing informed decisions to be made concerning which trees should be removed or retained in the event of development occurring.

4.5.3 For a tree to qualify under any given category, it should fall within the scope of that category's definition (U, A, B, C) and, for trees in categories A to C, it should qualify under one or more of the three subcategories (1, 2, 3). Subcategories 1, 2 and 3 are intended to reflect arboricultural and landscape qualities, and cultural values, respectively.

4.5.4 The tree survey schedule should list which subcategory applies. It is intended that each subcategory has equal weight such that, for example, an A1 tree has the same retention priority as an A2 tree. Some trees could qualify under more than one criterion.

4.5.5 When determining the appropriate category for any given tree, group or woodland (see **4.4**), the arboriculturist should start by considering whether the tree falls within the scope of category U. Assuming that it does not, the arboriculturist should then proceed on the presumption that all trees are considered according to the criteria for inclusion in category A. Trees that do not meet these criteria should then be considered in light of the criteria for inclusion in category B. This process should be repeated, as required, until the appropriate quality or value assessment is reached.

4.5.6 Trees of generally high quality and/or value which have a defect or defects that do not reduce their retention span below the suggested 40 year threshold, should be placed in category A, i.e. they should not be downgraded as a result of minor imperfections.

4.5.7 Where trees would otherwise be categorized as U, but have identifiable conservation, heritage or landscape value, even though only for the short term, they may be upgraded, although they might be suitable for retention only where issues concerning their safety can be appropriately managed.

4.5.8 When categorizing a tree, the presence of any serious disease or tree-related hazards should be taken into account. If disease is likely to be fatal or irremediable, or likely to require sanitation for the protection of other trees, it might be appropriate for the trees concerned to be categorized as U, even if they otherwise have considerable value. If structural defects present an unacceptable risk to people or property, the extent to which the defects are remediable, including the effect that this might have on the tree's remaining value, will influence whether the tree be assigned to the category that it would otherwise merit.

Copyright British Standards Institution
Provided by IHS under license with BSI - Uncontrolled Copy
No reproduction or networking permitted without license from IHS
Licensee=Atkins Global /5975177002, User=Dale, Thomas
Not for Resale, 04/19/2012 06:22:27 MDT

Table 1 **Cascade chart for tree quality assessment**

Category and definition	Criteria (including subcategories where appropriate)			Identification on plan
Trees unsuitable for retention (see Note)				
Category U Those in such a condition that they cannot realistically be retained as living trees in the context of the current land use for longer than 10 years	• Trees that have a serious, irremediable, structural defect, such that their early loss is expected due to collapse, including those that will become unviable after removal of other category U trees (e.g. where, for whatever reason, the loss of companion shelter cannot be mitigated by pruning) • Trees that are dead or are showing signs of significant, immediate, and irreversible overall decline • Trees infected with pathogens of significance to the health and/or safety of other trees nearby, or very low quality trees suppressing adjacent trees of better quality *NOTE Category U trees can have existing or potential conservation value which it might be desirable to preserve; see **4.5.7**.*			See Table 2
	1 Mainly arboricultural qualities	**2 Mainly landscape qualities**	**3 Mainly cultural values, including conservation**	
Trees to be considered for retention				
Category A **Trees of high quality** with an estimated remaining life expectancy of at least 40 years	Trees that are particularly good examples of their species, especially if rare or unusual; or those that are essential components of groups or formal or semi-formal arboricultural features (e.g. the dominant and/or principal trees within an avenue)	Trees, groups or woodlands of particular visual importance as arboricultural and/or landscape features	Trees, groups or woodlands of significant conservation, historical, commemorative or other value (e.g. veteran trees or wood-pasture)	See Table 2
Category B **Trees of moderate quality** with an estimated remaining life expectancy of at least 20 years	Trees that might be included in category A, but are downgraded because of impaired condition (e.g. presence of significant though remediable defects, including unsympathetic past management and storm damage), such that they are unlikely to be suitable for retention for beyond 40 years; or trees lacking the special quality necessary to merit the category A designation	Trees present in numbers, usually growing as groups or woodlands, such that they attract a higher collective rating than they might as individuals; or trees occurring as collectives but situated so as to make little visual contribution to the wider locality	Trees with material conservation or other cultural value	See Table 2
Category C **Trees of low quality** with an estimated remaining life expectancy of at least 10 years, or young trees with a stem diameter below 150 mm	Unremarkable trees of very limited merit or such impaired condition that they do not qualify in higher categories	Trees present in groups or woodlands, but without this conferring on them significantly greater collective landscape value; and/or trees offering low or only temporary/transient landscape benefits	Trees with no material conservation or other cultural value	See Table 2

Copyright British Standards Institution
Provided by IHS under license with BSI - Uncontrolled Copy
No reproduction or networking permitted without license from IHS
Licensee=Atkins Global /5975177002, User=Dale, Thomas
Not for Resale, 04/19/2012 06:22:27 MDT

Table 2 **Identification of tree categories**

Category (from Table 1)	Colour [A)]	RGB code [A)]
U	Dark red	127-000-000
A	Light green	000-255-000
B	Mid blue	000-000-255
C	Grey	091-091-091

[A)] Colours verified against http://safecolours.rigdenage.com/palettefiles.html#files [viewed 2012-03-26].

4.5.9 During the course of a tree survey, it might be found that certain trees require immediate attention. For example, they might present an imminent and serious hazard to life or property, or they might be affected by a pest or pathogen which would cause widespread and serious damage unless controlled or eradicated. These issues should be recorded and promptly brought to the attention of the relevant person or organization (including statutory authorities where applicable).

4.5.10 Particular care is needed when evaluating young trees, especially where they occur as individual specimens. Where these are less than 150 mm stem diameter at 1.5 m above adjacent ground level, it might be acceptable and relatively straightforward to mitigate their loss, if necessary, with similar new tree planting. Alternatively, it might be practicable to relocate such trees within the site (e.g. using a tree spade). Whilst the presence of young trees of good form and vitality is generally desirable (i.e. those trees which have the potential to develop into quality mature specimens), they need not necessarily be a significant constraint on the site's potential.

NOTE It is sometimes possible to relocate mature trees. However, as this is a costly and complex operation with a variable chance of success, it is a viable option only in exceptional cases.

4.5.11 The tree survey might identify the presence of veteran trees on the site. The implications of their presence on the use of the surrounding land should be assessed at the earliest possible stage of the design process. Where such trees are to be retained, particular care should be taken in the design to accommodate them in a setting that aids their long-term retention.

NOTE Whilst veteran trees typically provide a range of niche habitats, they are especially valuable if ancient, due to their scarcity and high habitat values for associated species of fungi, lichens and saproxylic invertebrates, including some which are rare or endangered and occur only where such trees have been continuously present for centuries. These trees will therefore almost always be included in the A3 category.

4.6 Root protection area (RPA)

4.6.1 For single stem trees, the RPA (see **3.7**) should be calculated as an area equivalent to a circle with a radius 12 times the stem diameter. For trees with more than one stem, one of the two calculation methods below should be used. In all cases, the stem diameter(s) should be measured in accordance with Annex C, and the RPA should be determined from Annex D. The calculated RPA for each tree should be capped to 707 m^2.

a) For trees with two to five stems, the combined stem diameter should be calculated as follows:

$$\sqrt{(\text{stem diameter 1})^2 + (\text{stem diameter 2})^2 \ldots + (\text{stem diameter 5})^2}$$

Copyright British Standards Institution
Provided by IHS under license with BSI - Uncontrolled Copy
No reproduction or networking permitted without license from IHS
Licensee=Atkins Global /5975177002, User=Dale, Thomas
Not for Resale, 04/19/2012 06:22:27 MDT

b) For trees with more than five stems (not illustrated in Annex C), the combined stem diameter should be calculated as follows:

$$\sqrt{(\text{mean stem diameter})^2 \times \text{ number of stems}}$$

4.6.2 The RPA for each tree should initially be plotted as a circle centred on the base of the stem. Where pre-existing site conditions or other factors indicate that rooting has occurred asymmetrically, a polygon of equivalent area should be produced. Modifications to the shape of the RPA should reflect a soundly based arboricultural assessment of likely root distribution.

4.6.3 Any deviation in the RPA from the original circular plot should take account of the following factors whilst still providing adequate protection for the root system:

a) the morphology and disposition of the roots, when influenced by past or existing site conditions (e.g. the presence of roads, structures and underground apparatus);

b) topography and drainage;

c) the soil type and structure;

d) the likely tolerance of the tree to root disturbance or damage, based on factors such as species, age, condition and past management.

5 Proposals: conception and design

5.1 General

5.1.1 The constraints imposed by trees, both above and below ground (see Note to **5.2.1**) should inform the site layout design, although it is recognized that the competing needs of development mean that trees are only one factor requiring consideration. Certain trees are of such importance and sensitivity as to be major constraints on development or to justify its substantial modification. However, care should be taken to avoid misplaced tree retention; attempts to retain too many or unsuitable trees on a site can result in excessive pressure on the trees during demolition or construction work, or post-completion demands for their removal.

5.1.2 As trees can affect and be affected by many aspects of site operations, during the conception and design process the project arboriculturist should be involved in ongoing review of layout, architectural, engineering and landscape drawings. All members of the design team should be made aware of the requirements for the successful retention of the retained trees and should make provision for these throughout the development process.

5.2 Constraints posed by existing trees

5.2.1 The RPA (see **4.6**) and any other relevant constraints should be plotted around each of the category A, B and C trees on relevant drawings, including proposed site layout plans.

NOTE RPAs represent below-ground constraints. Above-ground constraints might arise from the following attributes:

a) the current and ultimate height and spread of the tree;

b) species characteristics, including evergreen or deciduous, density of foliage, and factors such as susceptibility to honeydew drip, branch drop, fruit fall, etc.

Copyright British Standards Institution
Provided by IHS under license with BSI - Uncontrolled Copy
No reproduction or networking permitted without license from IHS
Licensee=Atkins Global /5975177002, User=Dale, Thomas
Not for Resale, 04/19/2012 06:22:27 MDT

5.2.2 The attributes listed in the Note to **5.2.1** can significantly affect potential land use or living conditions, including the effect of the tree on daylight and sunlight. Whilst either shade or sunlight might be desirable, depending on the potential use of the area affected, the design should avoid unreasonable obstruction of light.

NOTE 1 An indication of potential direct obstruction of sunlight can be illustrated by plotting a segment, with a radius from the centre of the stem equal to the height of the tree, drawn from due north-west to due east, indicating the shadow pattern through the main part of the day.

NOTE 2 Proprietary software is available that can assist with calculation and plotting of tree shadow extent (see also BRE CP75/75 [3] and BR 209 [4]).

5.2.3 The following factors should also be taken into account during the design process:

a) the presence of tree preservation orders, conservation areas or other regulatory protection;

b) potential incompatibilities between the layout and trees proposed for retention;

c) the working and access space needed for the construction of the proposed development;

   NOTE This might involve access facilitation pruning, or the use of a height restriction bar to prohibit tall vehicles accessing a site containing trees with low canopies.

d) the effect that construction requirements might have on the amenity value of trees, both on and near the site, including the effects of pruning to facilitate access and working space;

e) the requirement to protect the overhanging canopies of trees where they could be damaged by machinery, vehicles, barriers or scaffolding, where it will be necessary to increase the extent of the tree protection barriers to contain the canopy;

f) infrastructure requirements in relation to trees, e.g. easements for underground or above-ground apparatus; highway safety and visibility splays; and other infrastructural provisions, such as substations, refuse stores, lighting, signage, solar collectors, satellite dishes and CCTV sightlines;

g) the proposed end use of the space adjacent to retained trees;

h) the potential for new planting to provide mitigation for any losses.

5.2.4 Particular care is needed regarding the retention of large, mature, over-mature or veteran trees which become enclosed within the new development (see **4.5.11**). Where such trees are retained, adequate space should be allowed for their long-term physical retention and future maintenance.

NOTE The presence of large species trees is increasingly being seen as advantageous, since it contributes to climate change resilience, amongst other benefits. Achieving successful integration of large species trees requires careful consideration at the conceptual and design stages.

Copyright British Standards Institution
Provided by IHS under license with BSI - Uncontrolled Copy
No reproduction or networking permitted without license from IHS
Licensee=Atkins Global /5975177002, User=Dale, Thomas
Not for Resale, 04/19/2012 06:22:27 MDT

5.3 Proximity of structures to trees

5.3.1 The default position should be that structures (see **3.10**) are located outside the RPAs of trees to be retained. However, where there is an overriding justification for construction within the RPA, technical solutions might be available that prevent damage to the tree(s) (see Clause **7**). If operations within the RPA are proposed, the project arboriculturist should:

a) demonstrate that the tree(s) can remain viable and that the area lost to encroachment can be compensated for elsewhere, contiguous with its RPA;

b) propose a series of mitigation measures to improve the soil environment that is used by the tree for growth.

5.3.2 The cumulative effects of incursions into the RPA, e.g. from excavation for utility apparatus, are damaging and should be avoided. Where there is evidence that a tree has been previously subjected to damage by construction activity, this should be taken into account when considering the acceptability of further activity within the RPA.

5.3.3 On shrinkable soils, the foundation design should take account of the risks of indirect damage, i.e. subsidence and/or heave brought about by changes in moisture content of the soil due to remaining and removed vegetation, as well as the future influence of new planting (see Annex A).

5.3.4 A realistic assessment of the probable impact of any proposed development on the trees and vice versa should take into account the characteristics and condition of the trees, with due allowance and space for their future growth and maintenance requirements. To maximize the probability of successful tree retention, the following factors should be taken into account during the design process.

a) **Shading**. Shading by trees affects buildings and open spaces.

   1) **Shading of buildings**. Shading of buildings by trees can be a problem, particularly where there are rooms which require natural light. Proposed buildings should be designed to take account of existing trees, their ultimate size and density of foliage, and the effect that these will have on the availability of light.

   2) **Shading of open spaces**. Open spaces such as gardens and sitting areas should be designed to meet the normal requirement for direct sunlight for at least a part of the day.

   NOTE 1 Shading can be desirable to reduce glare or excessive solar heating, or to provide for comfort during hot weather. The combination of shading, wind speed/turbulence reduction and evapo-transpiration effects of trees can be utilized in conjunction with the design of buildings and spaces to provide local microclimatic benefits.

b) **Privacy and screening**. It might be highly desirable for trees to provide screening to a building, e.g. for internal privacy, to reduce overlooking by neighbours or to mitigate undesirable views, such as busy roads, railway lines or industrial premises. In order to achieve the desired outcome, account should be taken of the proposed orientation and aspect of the building, the type of building, its use and location relative to the tree, and the species attributes of the tree.

c) **Direct damage**. Below-ground damage to structures can occur as a result of incremental root and stem growth. Above-ground damage can occur to trees and structures by the continuous whipping of branches against the fabric of a building. Branch ends might have to be cut back periodically, possibly affecting the shape of the tree. Structures should therefore be

Copyright British Standards Institution
Provided by IHS under license with BSI - Uncontrolled Copy
No reproduction or networking permitted without license from IHS
Licensee=Atkins Global /5975177002, User=Dale, Thomas
Not for Resale, 04/19/2012 06:22:27 MDT

designed and/or located with due consideration for a tree's ultimate growth, so as to reduce the need for frequent remedial pruning or other maintenance.

NOTE 2 Exceptions might arise where this is a known and acceptable management outcome (e.g. cyclical maintenance of previously pollarded trees or where retention of desirable trees would otherwise not be feasible).

d) **Future pressure for removal**. The relationship of buildings to large trees can cause apprehension to occupiers or users of nearby buildings or spaces, resulting in pressure for the removal of the trees. Buildings and other structures should be sited allowing adequate space for a tree's natural development, with due consideration given to its predicted height and canopy spread. However, this does not mean that trees should not be retained within any particular distance of a structure (see Table A.1 for new planting).

e) **Seasonal nuisance**. Trees are naturally growing and shedding organisms. Leaves of some species can cause problems, particularly in the autumn, by blocking gullies and gutters. Fruit can cause slippery patches, and accumulation of honeydew can be damaging to surfaces and vehicles. Buildings, footpaths and hard-standing areas should be designed with due consideration to the proximity of retained trees, especially in terms of their foliage, flowering and fruiting habits. Where conflicts might arise, detailed design should address these issues, e.g. use of non-slip paving; provision of leaf guards or grilles on gutters and gullies; provision of access and means of maintenance.

5.4 Arboricultural impact assessment

5.4.1 The project arboriculturist should use the information detailed in **5.2** and **5.3** to prepare an arboricultural impact assessment that evaluates the direct and indirect effects of the proposed design and where necessary recommends mitigation.

5.4.2 The assessment should take account of the effects of any tree loss required to implement the design, and any potentially damaging activities proposed in the vicinity of retained trees. Such activities might include the removal of existing structures and hard surfacing, the installation of new hard surfacing, the installation of services, and the location and dimensions of all proposed excavations or changes in ground level, including any that might arise from the implementation of the recommended mitigation measures. In addition to the impact of the permanent works, account should be taken of the buildability of the scheme in terms of access, adequate working space and provision for the storage of materials, including topsoil.

NOTE Scaled cross-sections and other drawings might be required to demonstrate the feasibility of the proposals (see Annex B).

5.4.3 As well as an evaluation of the extent of the impact on existing trees, the arboricultural impact assessment should include:

a) the tree survey (see **4.4**);

b) trees selected for retention, clearly identified (e.g. by number) and marked on a plan with a continuous outline;

c) trees to be removed, also clearly identified (e.g. by number) and marked on a plan with a dashed outline or similar;

d) trees to be pruned, including any access facilitation pruning, also clearly identified and labelled or listed as appropriate;

Copyright British Standards Institution
Provided by IHS under license with BSI - Uncontrolled Copy
No reproduction or networking permitted without license from IHS
Licensee=Atkins Global /5975177002, User=Dale, Thomas
Not for Resale, 04/19/2012 06:22:27 MDT

e) areas designated for structural landscaping that need to be protected from construction operations in order to prevent the soil structure being damaged;

f) evaluation of impact of proposed tree losses;

g) evaluation of tree constraints (see **5.2**) and draft tree protection plan (see **5.5**);

h) issues to be addressed by an arboricultural method statement (see **6.1**), where necessary in conjunction with input from other specialists.

5.5 Tree protection plan

5.5.1 The tree protection plan should be superimposed on a layout plan, based on the topographical survey (see **4.1** and **4.2**) and showing all hard surfacing and other existing structures within the RPA.

5.5.2 The plan should clearly indicate the precise location of protective barriers to be erected to form a construction exclusion zone around the retained trees. It should also show the extent and type of ground protection, and any additional physical measures, such as tree protection boxes, that will need to be installed to safeguard vulnerable sections of trees and their RPAs where construction activity cannot be fully or permanently excluded.

5.5.3 These measures should be indicated on the plan, accompanied by descriptive text as required. Barrier and ground protection offsets should be dimensioned from existing fixed points on the site to enable accurate setting out. The position of barriers and any ground protection should be shown as a polygon representing the actual alignment of the protection (see **4.6**).

5.5.4 Where temporary access is to be permitted into a construction exclusion zone, the extent of the set-back of the permanent barrier should be clearly indicated, along with the temporary ground protection measures to be adopted for the duration of the works within the RPA (**6.2.3**).

5.5.5 These details should be incorporated into relevant subsequent plans, method statements used for design purposes and construction drawings issued for use on site, to ensure that all interested parties are fully aware of the areas in which access and works may and may not take place.

5.5.6 To avoid disturbance to the physical protection, it is essential to make allowance for, and plan, all construction operations which will be undertaken in the vicinity of trees. Factors that need to be considered include, but are not limited to:

a) site construction access;

b) the intensity and nature of the construction activity;

c) contractors' car parking;

d) phasing of construction works;

e) the space needed for foundation excavations and construction works;

f) the availability of special construction techniques;

g) the location and space needed for all temporary and permanent apparatus and service runs, including foul and surface water drains, land drains, soakaways, gas, oil, water, electricity, telephone, television or other communication cables;

h) all changes in ground level, including the location of retaining walls, steps and making adequate allowance for foundations of such walls and backfillings;

Copyright British Standards Institution
Provided by IHS under license with BSI - Uncontrolled Copy
No reproduction or networking permitted without license from IHS
Licensee=Atkins Global /5975177002, User=Dale, Thomas
Not for Resale, 04/19/2012 06:22:27 MDT

i) working space for cranes, plant, scaffolding and access during works;

j) space for site huts, temporary toilet facilities (including their drainage) and other temporary structures;

k) the type and extent of landscape works which will be needed within the protected areas, and the effects these will have on the root system;

l) space for storing (whether temporary or long-term) materials, spoil and fuel and the mixing of cement and concrete;

m) the effects of slope on the movement of potentially harmful liquid spillages towards or into protected areas.

NOTE Attention is drawn to the Construction (Design and Management) Regulations 2007 [5] and the Construction (Design and Management) Regulations (Northern Ireland) 2007 [6].

5.6 New planting design and associated landscape operations

*COMMENTARY ON **5.6***

All new tree planting proposals are an essential consideration in the layout, design and future use of a development site, the local landscape character and the contextual surroundings. As trees generally form the dominant elements of the long-term landscape structure of a site, careful consideration needs to be given to their ultimate height and spread, form, habit and colour, density of foliage and maintenance implications, in relation to both the built form of the new development, and the retained landscape features.

Trees, either individually or as formal or informal groups, perform a variety of functional roles that can be exploited by a well-designed landscape. These include:

a) contributions to green infrastructure networks, of particular importance in built-up areas;

b) the inherent aesthetic attractiveness of trees as prominent landscape architectural features;

c) screening of undesirable views and provision of privacy;

d) articulation and definition of spaces;

e) definition and direction of routes and views;

f) introduction of natural character and seasonal change that can relieve or complement artificial environments;

g) reflection of local landscape character and providing a sense of place, sometimes as significant landmarks;

h) control of soil erosion, attenuation of surface water run-off and mitigation of flood risk, through root system reinforcement and canopy interception of precipitation.

Many of these factors can provide a significant enhancement to the value of property. This is reflected in research carried out by CABE [7] and in anecdotal evidence of high property values in well-treed areas.

5.6.1 General

The purpose of proposed new planting should be understood from the start of the design process so that long-term structural landscape objectives inform decisions regarding appropriate locations and species. Advice on detailed design and how this would integrate with proposed development infrastructure should be sought from a landscape architect or other competent person.

Copyright British Standards Institution
Provided by IHS under license with BSI - Uncontrolled Copy
No reproduction or networking permitted without license from IHS
Licensee=Atkins Global /5975177002, User=Dale, Thomas
Not for Resale, 04/19/2012 06:22:27 MDT

5.6.2 New planting adjacent to structures

5.6.2.1 New planting should normally be selected and located to ensure that adequate space is allowed for future growth of root systems (see Table A.1), stems and canopies to maturity, without this causing direct physical contact with and potential direct damage to nearby structures, or causing obstruction of access, light or other avoidable nuisance. Exceptions could include planned short-term planting.

5.6.2.2 Paths, patios and driveways can be vulnerable to damage by trees. Design decisions should take into account the known habits of tree species and/or options for flexible pavings or other appropriate hard landscape specifications.

5.6.2.3 On shrinkable clay soils, account should be taken of the risk of subsidence that might be caused or exacerbated by new planting removing moisture from load-bearing soils.

5.6.2.4 The foundation construction and condition of existing structures, especially on shrinkable clay soils, should be a determining factor when taking decisions on species and location for new plantings, to minimize subsidence risks and to seek compatibility between structures and trees.

5.6.2.5 In the case of new structures, especially on shrinkable soils, the design and construction of foundations should be undertaken in conjunction with planting proposals to minimize the risks of structural movement, taking account of the possibility of periods of prolonged drought associated with climate change. It is therefore important to ensure that foundation design of permanent structures follows up-to-date guidance. Expert advice should be sought as necessary.

5.6.2.6 The obstruction of light and views, the creation of shade by new trees, and the likely extent and density of tree crowns when fully grown, should be taken into account when designing new planting adjacent to buildings. Design and species selection should allow the enjoyment of reasonable light and shading where desirable as the trees develop into mature specimens.

NOTE An appropriate balance of views and screening should be provided. The planting of large and/or fast-growing evergreen trees as screens or hedging could lead to the unacceptable obstruction of light all year round and might therefore be unsuited to nearby residential accommodation.

5.6.3 New planting adjacent to roads

Roadside trees can make a significant contribution to the character of new developments. They are of increasing importance as green infrastructure elements in existing built-up areas, providing shade, shelter, urban cooling and biodiversity benefits. Their siting and species selection should be carefully coordinated at an early stage with other aspects of highway design and, in the case of adopted roads, with the agreement of the relevant highway authority. Sight line requirements, lighting schemes, CCTV, underground and overhead service routes and avoidance of physical obstruction or damage should all be taken into account, with due consideration for future growth and periodic maintenance requirements.

Copyright British Standards Institution
Provided by IHS under license with BSI - Uncontrolled Copy
No reproduction or networking permitted without license from IHS
Licensee=Atkins Global /5975177002, User=Dale, Thomas
Not for Resale, 04/19/2012 06:22:27 MDT

5.6.4 New planting in the vicinity of underground utility apparatus and overhead cables

Trees should not be planted where they might obstruct overhead power lines or cables. In new developments, early consultation and cooperation between the developer and the utility company is essential, and proposed service routes should be coordinated with the landscape design proposals. Underground apparatus should be ducted or otherwise protected at the time of construction to enable trees to be planted nearby without conflict. Wherever possible, common service trenches should be specified to minimize the land take associated with underground services and to facilitate future maintenance.

NOTE Further guidance is given in Volume 4 of the NJUG guidelines [N1].

6 Technical design

*COMMENTARY ON CLAUSE **6***

Technical design includes information sufficient to provide a high level of confidence in the outcome for trees retained on development sites. Where planning permission or other statutory controls apply, details might need to be submitted in draft form or heads of terms to allow for changes to the design that might occur after permission has been granted. In these cases, it will be necessary for the project arboriculturist to set out a series of parameters for construction activity (e.g. where service routes and/or construction activity should not occur), based on the RPA and the physiological needs of the tree, to which the finalized specifications and statements will apply.

6.1 Arboricultural method statement

6.1.1 A precautionary approach towards tree protection should be adopted and any operations, including access, proposed within the RPA (or crown spread where this is greater) should be described within an arboricultural method statement, in order to demonstrate that the operations can be undertaken with minimal risk of adverse impact on trees to be retained.

6.1.2 The arboricultural method statement should be appropriate to the proposals and might typically address some or all of the following, incorporating relevant information from other specialists as required:

a) removal of existing structures and hard surfacing;

b) installation of temporary ground protection (see **6.2.3**);

c) excavations and the requirement for specialized trenchless techniques (see **7.7.2**);

d) installation of new hard surfacing – materials, design constraints and implications for levels;

e) specialist foundations – installation techniques and effect on finished floor levels and overall height;

f) retaining structures to facilitate changes in ground levels;

g) preparatory works for new landscaping;

h) auditable/audited system of arboricultural site monitoring, including a schedule of specific site events requiring input or supervision.

6.1.3 The arboricultural method statement should also include a list of contact details for the relevant parties.

Copyright British Standards Institution
Provided by IHS under license with BSI - Uncontrolled Copy
No reproduction or networking permitted without license from IHS
Licensee=Atkins Global /5975177002, User=Dale, Thomas
Not for Resale, 04/19/2012 06:22:27 MDT

6.2 Barriers and ground protection

6.2.1 General

6.2.1.1 All trees that are being retained on site should be protected by barriers and/or ground protection (see **5.5**) before any materials or machinery are brought onto the site, and before any demolition, development or stripping of soil commences. Where all activity can be excluded from the RPA, vertical barriers should be erected to create a construction exclusion zone. Where, due to site constraints, construction activity cannot be fully or permanently excluded in this manner from all or part of a tree's RPA, appropriate ground protection should be installed (see **6.2.3**).

6.2.1.2 Areas of retained structural planting, or designated for new structural planting, should be similarly protected, based on the extent of the soft landscaping shown on the approved drawings.

6.2.1.3 The protected area should be regarded as sacrosanct, and, once installed, barriers and ground protection should not be removed or altered without prior recommendation by the project arboriculturist and, where necessary, approval from the local planning authority.

6.2.1.4 Where required, pre-development tree work may be undertaken before the installation of tree protection measures, with the agreement of the project arboriculturist or local planning authority if appropriate (see also **8.8.1**).

6.2.1.5 It should be confirmed by the project arboriculturist that the barriers and ground protection have been correctly set out on site, prior to the commencement of any other operations.

6.2.2 Barriers

6.2.2.1 Barriers should be fit for the purpose of excluding construction activity and appropriate to the degree and proximity of work taking place around the retained tree(s). Barriers should be maintained to ensure that they remain rigid and complete.

6.2.2.2 The default specification should consist of a vertical and horizontal scaffold framework, well braced to resist impacts, as illustrated in Figure 2. The vertical tubes should be spaced at a maximum interval of 3 m and driven securely into the ground. Onto this framework, welded mesh panels should be securely fixed. Care should be exercised when locating the vertical poles to avoid underground services and, in the case of the bracing poles, also to avoid contact with structural roots. If the presence of underground services precludes the use of driven poles, an alternative specification should be prepared in conjunction with the project arboriculturist that provides an equal level of protection. Such alternatives could include the attachment of the panels to a free-standing scaffold support framework.

6.2.2.3 Where the site circumstances and associated risk of damaging incursion into the RPA do not necessitate the default level of protection, an alternative specification should be prepared by the project arboriculturist and, where relevant, agreed with the local planning authority. For example, 2 m tall welded mesh panels on rubber or concrete feet might provide an adequate level of protection from cars, vans, pedestrians and manually operated plant. In such cases, the fence panels should be joined together using a minimum of two anti-tamper couplers, installed so that they can only be removed from inside the fence. The distance between the fence couplers should be at least 1 m and should be uniform throughout the fence. The panels should be supported on the inner side by stabilizer struts, which should normally be attached to a base plate secured with ground pins (Figure 3a). Where the fencing is to be erected

Copyright British Standards Institution
Provided by IHS under license with BSI - Uncontrolled Copy
No reproduction or networking permitted without license from IHS
Licensee=Atkins Global /5975177002, User=Dale, Thomas
Not for Resale, 04/19/2012 06:22:27 MDT

on retained hard surfacing or it is otherwise unfeasible to use ground pins, e.g. due to the presence of underground services, the stabilizer struts should be mounted on a block tray (Figure 3b).

NOTE 1 Examples of configurations for steel mesh perimeter fencing systems are given in BS 1722-18.

NOTE 2 It might be feasible on some sites to use temporary site office buildings as components of the tree protection barriers, provided these can be installed and removed without damaging the retained trees or their rooting environment.

6.2.2.4 All-weather notices should be attached to the barrier with words such as:

"CONSTRUCTION EXCLUSION ZONE – NO ACCESS".

Figure 2 **Default specification for protective barrier**

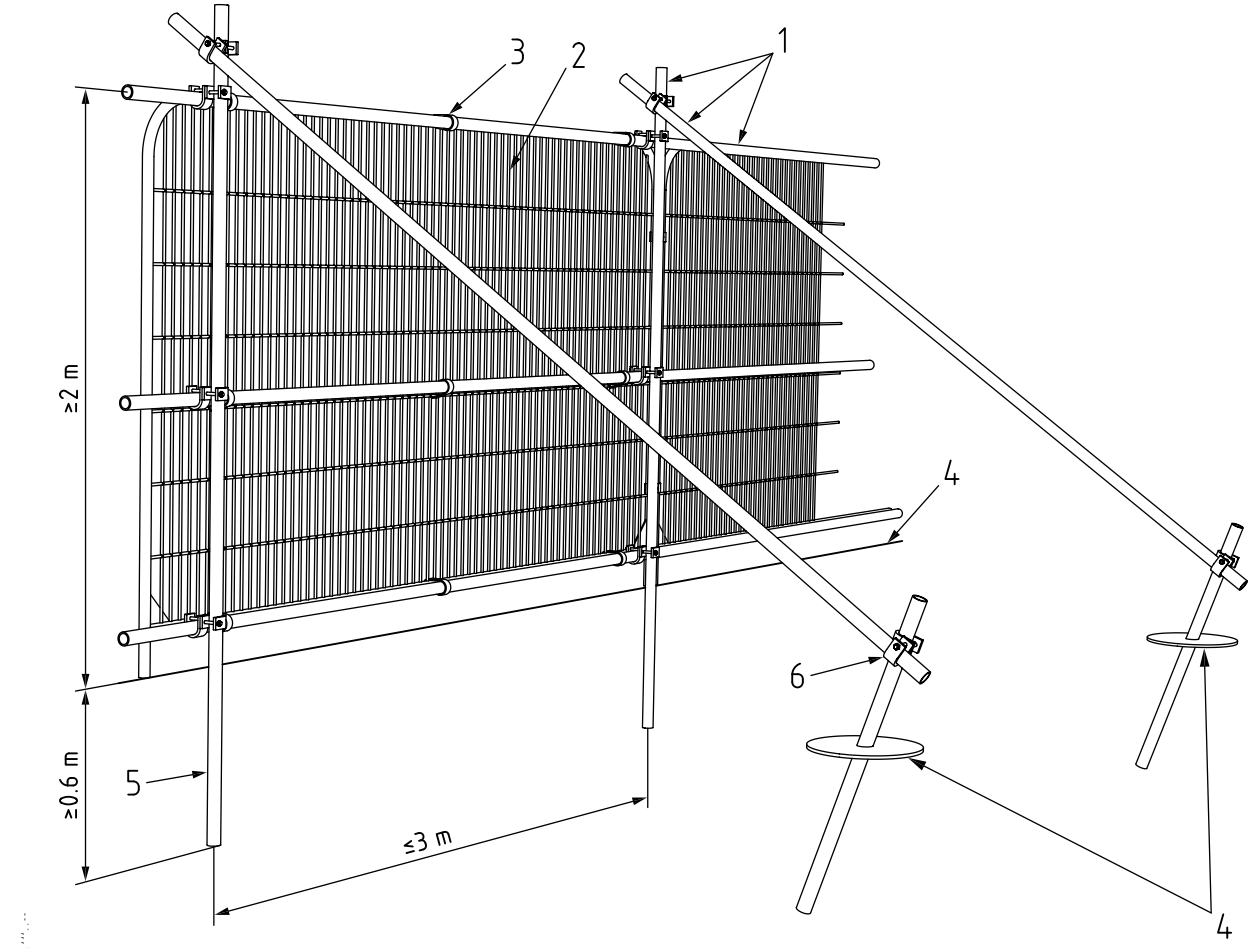

Key

1 Standard scaffold poles

2 Heavy gauge 2 m tall galvanized tube and welded mesh infill panels

3 Panels secured to uprights and cross-members with wire ties

4 Ground level

5 Uprights driven into the ground until secure (minimum depth 0.6 m)

6 Standard scaffold clamps

Copyright British Standards Institution
Provided by IHS under license with BSI - Uncontrolled Copy
No reproduction or networking permitted without license from IHS
Licensee=Atkins Global /5975177002, User=Dale, Thomas
Not for Resale, 04/19/2012 06:22:27 MDT

Figure 3 **Examples of above-ground stabilizing systems**

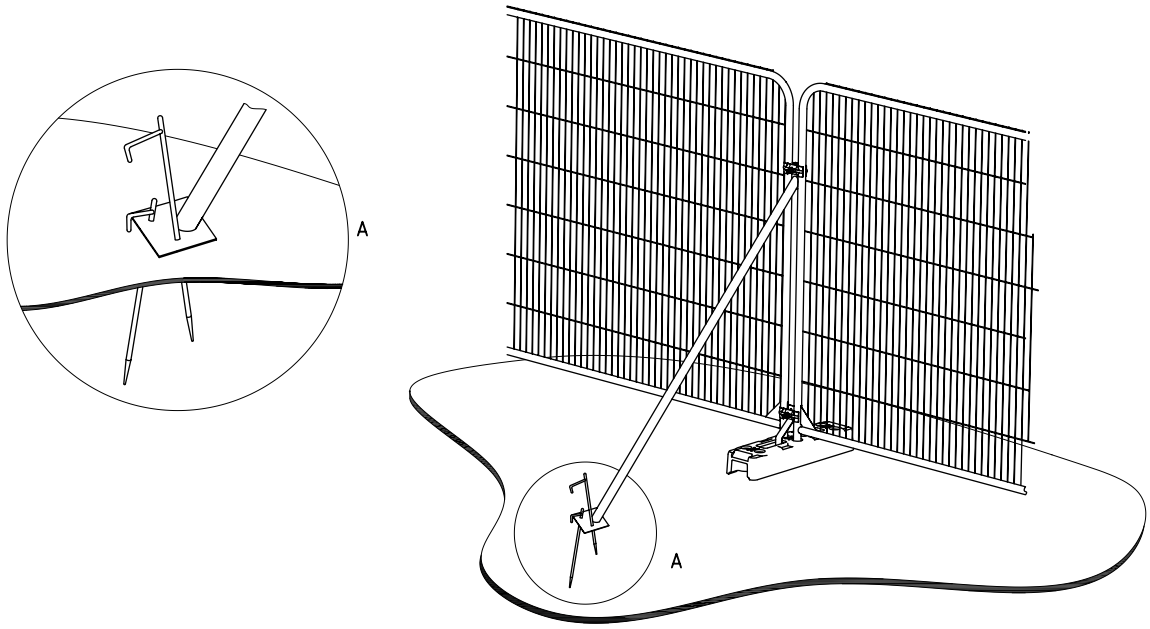

a) Stabilizer strut with base plate secured with ground pins

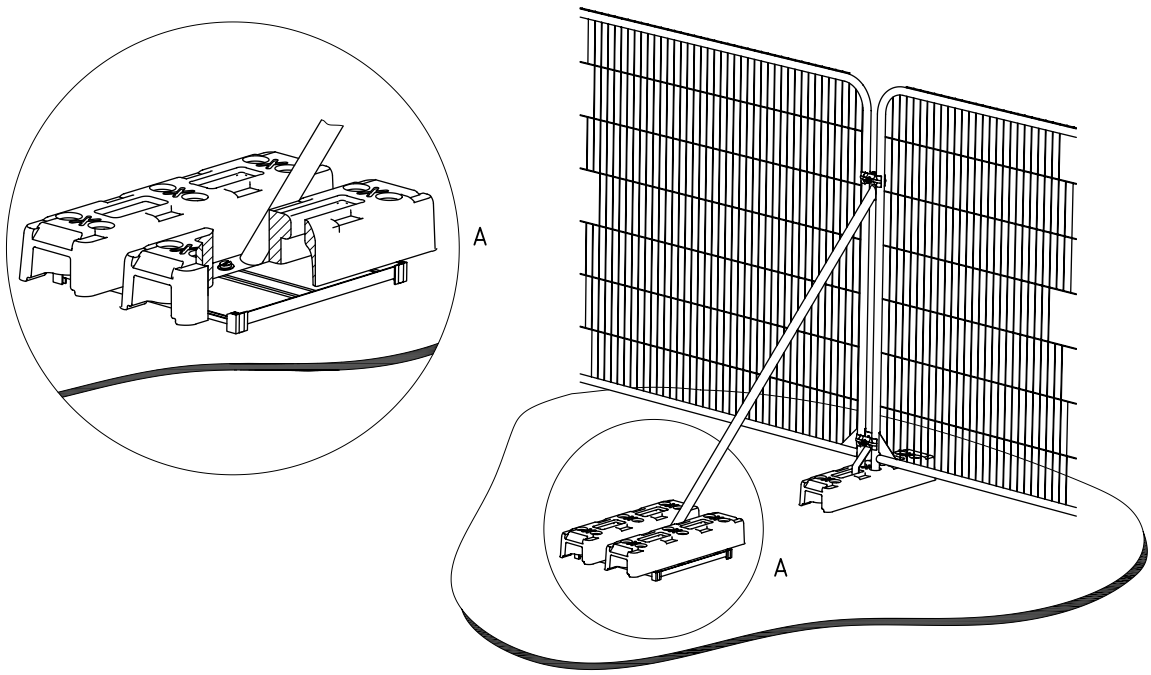

b) Stabilizer strut mounted on block tray

6.2.3 Ground protection during demolition and construction

6.2.3.1 Where construction working space or temporary construction access is justified within the RPA, this should be facilitated by a set-back in the alignment of the tree protection barrier. In such areas, suitable existing hard surfacing that is not proposed for re-use as part of the finished design should be retained to act as temporary ground protection during construction, rather than being removed during demolition. The suitability of such surfacing for this purpose should be evaluated by the project arboriculturist and an engineer as appropriate.

Copyright British Standards Institution
Provided by IHS under license with BSI - Uncontrolled Copy
No reproduction or networking permitted without license from IHS
Licensee=Atkins Global /5975177002, User=Dale, Thomas
Not for Resale, 04/19/2012 06:22:27 MDT

6.2.3.2 Where the set-back of the tree protection barrier would expose unmade ground to construction damage, new temporary ground protection should be installed as part of the implementation of physical tree protection measures prior to work starting on site.

6.2.3.3 New temporary ground protection should be capable of supporting any traffic entering or using the site without being distorted or causing compaction of underlying soil.

NOTE The ground protection might comprise one of the following:

a) for pedestrian movements only, a single thickness of scaffold boards placed either on top of a driven scaffold frame, so as to form a suspended walkway, or on top of a compression-resistant layer (e.g. 100 mm depth of woodchip), laid onto a geotextile membrane;

b) for pedestrian-operated plant up to a gross weight of 2 t, proprietary, inter-linked ground protection boards placed on top of a compression-resistant layer (e.g. 150 mm depth of woodchip), laid onto a geotextile membrane;

c) for wheeled or tracked construction traffic exceeding 2 t gross weight, an alternative system (e.g. proprietary systems or pre-cast reinforced concrete slabs) to an engineering specification designed in conjunction with arboricultural advice, to accommodate the likely loading to which it will be subjected.

6.2.3.4 The locations of and design for temporary ground protection should be shown on the tree protection plan and detailed within the arboricultural method statement (see **6.1**).

6.2.3.5 In all cases, the objective should be to avoid compaction of the soil, which can arise from the single passage of a heavy vehicle, especially in wet conditions, so that tree root functions remain unimpaired.

6.2.4 Additional precautions outside the exclusion zone

6.2.4.1 Planning of site operations should take sufficient account of wide loads, tall loads and plant with booms, jibs and counterweights (including drilling rigs), in order that they can operate without coming into contact with retained trees. Such contact can result in serious damage to the trees and might make their safe retention impossible. Consequently, any transit or traverse of plant in proximity to trees should be conducted under the supervision of a banksman, to ensure that adequate clearance from trees is maintained at all times. Access facilitation pruning should be undertaken where necessary to maintain this clearance.

NOTE In some instances, local planning authority consent for pruning might be required.

6.2.4.2 Fires on sites should be avoided if possible. Where they are unavoidable, they should not be lit in a position where heat could affect foliage or branches. The potential size of a fire and the wind direction should be taken into account when determining its location, and it should be attended at all times until safe enough to leave.

NOTE Local environmental health authorities might have specific restrictions.

6.2.4.3 Any materials whose accidental spillage would cause damage to a tree should be stored and handled well away from the outer edge of its RPA.

Copyright British Standards Institution
Provided by IHS under license with BSI - Uncontrolled Copy
No reproduction or networking permitted without license from IHS
Licensee=Atkins Global /5975177002, User=Dale, Thomas
Not for Resale, 04/19/2012 06:22:27 MDT

6.3 Site monitoring

Wherever trees on or adjacent to a site have been identified within the tree protection plan for protective measures, there should be an auditable system of arboricultural site monitoring. This should extend to arboricultural supervision whenever construction and development activity is to take place within or adjacent to any RPA.

NOTE Existing planning regulations include the provision for local authorities to enforce planning requirements. The project arboriculturist appointed by the developer can help monitor site activity, but enforcement is the responsibility of the local authority.

7 Demolition and construction in proximity to existing trees

7.1 General

7.1.1 Construction within the RPA should accord to the principle that the tree and soil structure take priority, and the most reliable way to ensure this is to preserve the RPA completely undisturbed. Soil structure should be preserved at a suitable bulk density for root growth and function (of particular importance for soils of a high fines content), existing rootable soil retained and roots themselves protected.

7.1.2 The ability of a tree to tolerate some disturbance and alteration of its growing conditions depends on specific circumstances, including prevailing site conditions, and in general, the older the tree, the less successfully it will adapt to new conditions.

7.1.3 Where alternative design solutions are not available such that construction is proposed within the RPA, the potential impact of the proposals on the tree should be assessed (**5.4**), and a tree protection plan (**5.5**) and arboricultural method statement (**6.1**) produced. Details of design proposals should be developed in conjunction with the project arboriculturist and, where required, input from a suitably qualified engineer. In order to demonstrate that the proposals are technically feasible (see Commentary on Clause **6**), such details should be included within planning applications. The exception to this is the installation of underground utility apparatus, where it can be demonstrated that this is achievable by the use of trenchless technology (see **7.7**) and where entry and retrieval pits can be formed outside the RPA. Where utility operations do not require planning permission, including those performed by statutory undertakers, they should still be undertaken in accordance with these principles. As a minimum standard, such operations should be undertaken in accordance with NJUG Volume 4, issue 2 [N1].

7.2 Avoiding physical damage to the roots during demolition or construction

7.2.1 To avoid damage to tree roots, existing ground levels should be retained within the RPA. Intrusion into soil (other than for piling) within the RPA is generally not acceptable, and topsoil within it should be retained in situ. However, limited manual excavation within the RPA might be acceptable, subject to justification. Such excavation should be undertaken carefully, using hand-held tools and preferably by compressed air soil displacement.

NOTE Due to the demands that manual excavation places on a development project, and limitations arising from health and safety considerations, it is not realistic to plan for excavation using hand-held tools where there is a need for trench shoring or grading the sides of the excavation to a stable angle of repose.

Copyright British Standards Institution
Provided by IHS under license with BSI - Uncontrolled Copy
No reproduction or networking permitted without license from IHS
Licensee=Atkins Global /5975177002, User=Dale, Thomas
Not for Resale, 04/19/2012 06:22:27 MDT

7.2.2 Roots, whilst exposed, should immediately be wrapped or covered to prevent desiccation and to protect them from rapid temperature changes. Any wrapping should be removed prior to backfilling, which should take place as soon as possible.

7.2.3 Roots smaller than 25 mm diameter may be pruned back, making a clean cut with a suitable sharp tool (e.g. bypass secateurs or handsaw), except where they occur in clumps. Roots occurring in clumps or of 25 mm diameter and over should be severed only following consultation with an arboriculturist, as such roots might be essential to the tree's health and stability.

7.2.4 Prior to backfilling, retained roots should be surrounded with topsoil or uncompacted sharp sand (builders' sand should not be used because of its high salt content, which is toxic to tree roots), or other loose inert granular fill, before soil or other suitable material is replaced. This material should be free of contaminants and other foreign objects potentially injurious to tree roots.

7.3 Tree protection during demolition

7.3.1 Where demolition is proposed on a site where trees are to be retained, access facilitation pruning should be undertaken as necessary to prevent injurious contact between demolition plant and the tree(s). In some cases, working space may be provided by temporarily tying back tree branches. Pruning or tying should be undertaken in accordance with a specification prepared by an arboriculturist.

NOTE The local authority will be able to advise whether the trees are under statutory protection such that consent for tree works might be required.

7.3.2 When demolishing a structure (including underground structures) within what would otherwise be the RPA, barriers should be erected, and ground protection installed (see **6.2.3**), to protect the underlying soil to the edge of the existing structure.

7.3.3 All plant and vehicles engaged in demolition works should either operate outside the RPA, or run on the ground protection (see **6.2.3**). Where such ground protection is required, it should be installed prior to commencement of operations.

7.3.4 Where trees stand adjacent to structures to be removed, the demolition should be undertaken inwards within the footprint of the existing building (often referred to as "top down, pull back").

NOTE Where there is a significant build-up of dust on the foliage, it might be necessary to hose down the tree(s).

7.3.5 The advice of an arboriculturist should be sought where underground structures present within the RPA are, or will become, redundant. In general it is preferable to leave such structures in situ, as their removal could damage adjacent tree roots.

7.3.6 Where an existing hard surface is scheduled for removal, care should be taken not to disturb tree roots that might be present beneath it. Hand-held tools or appropriate machinery should be used (under arboricultural supervision) to remove the existing surface, working backwards over the area, so that the machine is not moving over the exposed ground (see **7.2.2** for protection of exposed roots). If a new hard surface is to be laid, it might be preferable to leave any existing sub-base in situ, augmenting it where required.

Copyright British Standards Institution
Provided by IHS under license with BSI - Uncontrolled Copy
No reproduction or networking permitted without license from IHS
Licensee=Atkins Global /5975177002, User=Dale, Thomas
Not for Resale, 04/19/2012 06:22:27 MDT

7.4 Permanent hard surfacing within the RPA

NOTE This subclause does not apply to veteran trees, where it is recommended that no construction, including the installation of new hard surfacing, occurs within the RPA.

7.4.1 General

Where permanent hard surfacing within the RPA is considered unavoidable, site-specific and specialist arboricultural and construction design advice should be sought to determine whether it is achievable without significant adverse impact on trees to be retained.

*NOTE Specialist arboricultural advice includes, for example, advice on the tolerance of a tree species to the installation of a permanent hard surface within the RPA or tolerance of salt damage (see **7.4.2.4**).*

7.4.2 Design recommendations

7.4.2.1 The design should not require excavation into the soil, including through lowering of levels and/or scraping, other than the removal, using hand tools, of any turf layer or other surface vegetation. If it is intended to use the new surface for construction access, it is essential that the extra loading and wear arising from this are taken into account during the design process.

7.4.2.2 The structure of the hard surface should be designed to avoid localized compaction by evenly distributing the loading over the track width and wheelbase of any vehicles expected to use the access.

7.4.2.3 New permanent hard surfacing should not exceed 20% of any existing unsurfaced ground within the RPA.

7.4.2.4 If the new surface is likely to be subject to de-icing salt application, an impermeable barrier should be incorporated to prevent contamination of the rooting area. Run-off should be directed away from the RPA (see also **8.6.5**).

7.4.2.5 Where a permeable surface is to be used by vehicular traffic, a geotextile should be used at the base of construction to help prevent pollution contamination of the rooting area below.

7.4.2.6 Permeable hard surfacing can result in soil volume moisture content remaining at or near field capacity for long periods. Where there is a risk of waterlogging, the design should incorporate appropriate land drainage (see also **4.3** and **8.6.5**). Land drainage within the RPA should be designed to avoid damage to the tree and the soil structure, e.g. sand slitting formed by compressed air soil displacement with the slits set radially to the tree.

7.4.2.7 The hard surface should be resistant to or tolerant of deformation by tree roots, and should be set back from the stem of the tree and its above-ground root buttressing by a minimum of 500 mm to allow for growth and movement. Resulting gaps may be filled using appropriate inert granular material.

NOTE 1 Appropriate sub-base options for new hard surfacing include three-dimensional cellular confinement systems. Alternatively, piles, pads or elevated beams can be used to support surfaces to bridge over the RPA or, following exploratory investigations to determine location, to provide support within the RPA while allowing the retention of roots greater than 25 mm in diameter.

NOTE 2 The use of two-dimensional load suspension systems is not recommended for surfaces intended for use by vehicles.

Copyright British Standards Institution
Provided by IHS under license with BSI - Uncontrolled Copy
No reproduction or networking permitted without license from IHS
Licensee=Atkins Global /5975177002, User=Dale, Thomas
Not for Resale, 04/19/2012 06:22:27 MDT

7.4.2.8 When designing the hard surface, account should be taken of finished levels in relation to adjacent structures, including damp-proof courses, garage slabs and links to existing vehicular cross-overs.

NOTE Attention is drawn to the Building Regulations 2010 [8], the Building (Scotland) Regulations 2004, as amended [9] and the Building Regulations (Northern Ireland) 2000 [10], in respect of the need for accessible thresholds.

7.4.2.9 If a permeable surface is to be used by construction traffic, this should be protected with a temporary sacrificial surface laid over a geotextile separator to ensure that its permeability is retained (i.e. interstices should not become blocked during construction).

7.4.3 Edge supports

The excavation needed for the placement of kerbs, edgings and their associated foundations and haunchings can damage tree roots. Within the RPA, this should be avoided either by the use of alternative methods of edge support or by not using supports at all.

NOTE For example, where kerbing is required for light structures, such as footpaths, above-ground peg and board edging might be acceptable. Where areas of hard surface require edge support, the use of sleepers (pinned in place where required), gabions or other non-invasive ground-contact structures, including the use of proprietary products, can provide appropriate solutions.

7.4.4 Precautions

7.4.4.1 The soil structure including the area beneath the proposed new hard surface should be protected from compaction during installation. This may be achieved by:

a) the use of temporary ground protection in accordance with **6.2.3** to safeguard the working area;

b) constructing the new surface with machinery working forward from the surface as it is constructed (known as “rolling out”).

7.4.4.2 Where a herbicide is used to control vegetation prior to construction of hard surfacing, the manufacturer’s guidance should be strictly followed and care should be taken to avoid any damaging effects on trees or other vegetation to be retained.

NOTE The use of appropriate geotextiles can provide a barrier that inhibits weed growth but allows water and gases to pass freely.

7.4.4.3 The ground should not be skimmed to establish the new hard surface at the former ground level. Loose organic matter and/or turf should be removed carefully using hand tools. The new surface should then be established above the soil.

7.4.4.4 Raising levels should be achieved by use of a granular material which remains gas- and water-permeable throughout its design life.

7.4.4.5 Due to the highly alkaline leachate produced during the curing of wet concrete, concrete should not be poured within the RPA unless an impermeable liner has been installed.

7.5 Special engineering for foundations within the RPA

7.5.1 The use of traditional strip footings can result in extensive root loss and should be avoided. The insertion of specially engineered structures within RPAs may be justified if this enables the retention of a good quality tree that would otherwise be lost (usually categories A or B). Designs for foundations that would

Copyright British Standards Institution
Provided by IHS under license with BSI - Uncontrolled Copy
No reproduction or networking permitted without license from IHS
Licensee=Atkins Global /5975177002, User=Dale, Thomas
Not for Resale, 04/19/2012 06:22:27 MDT

minimize adverse impact on trees should include particular attention to existing levels, proposed finished levels and cross-sectional details. In order to arrive at a suitable solution, site-specific and specialist advice regarding foundation design should be sought from the project arboriculturist and an engineer. In shrinkable soils, the foundation design should take account of the risk of indirect damage (see **A.1.4**).

7.5.2 Root damage can be minimized by using:

- piles, with site investigation used to determine their optimal location whilst avoiding damage to roots important for the stability of the tree, by means of hand tools or compressed air soil displacement, to a minimum depth of 600 mm;
- beams, laid at or above ground level, and cantilevered as necessary to avoid tree roots identified by site investigation.

7.5.3 Where a slab for a minor structure (e.g. shed base) is to be formed within the RPA, it should bear on existing ground level, and should not exceed an area greater than 20% of the existing unsurfaced ground.

7.5.4 Slabs for larger structures (e.g. dwellings) should be constructed with a ventilated air space between the underside of the slab and the existing soil surface (to enable gas exchange and venting through the soil surface). In such cases, a specialist irrigation system should also be employed (e.g. roof run-off redirected under the slab). The design of the foundation should take account of any effect on the load-bearing properties of underlying soil from the redirected roof run-off. Approval in principle for a foundation that relies on topsoil retention and roof run-off under the slab should be sought from the building control authority prior to this approach being relied on.

7.5.5 Where piling is to be installed near to trees, the smallest practical pile diameter should be used, as this reduces the possibility of striking major tree roots, and reduces the size of the rig required to sink the piles. If a piling mat is required, this should conform to the parameters for temporary ground protection given in **6.2.3**. Use of the smallest practical piling rig is also important where piling within the branch spread is proposed, as this can reduce the need for access facilitation pruning. The pile type should be selected bearing in mind the need to protect the soil and adjacent roots from the potentially toxic effects of uncured concrete, e.g. sleeved bored pile or screw pile.

7.6 Subterranean construction within the RPA

7.6.1 Where it is proposed to form subterranean structures, e.g. basement extensions, within the RPA, it is essential to avoid excavating down through rootable soil if trees are to be retained. In some cases, it might be technically possible to form the excavation by undermining the soil beneath the RPA.

7.6.2 The following factors should be taken into account, in light of site-specific and specialist arboricultural, engineering and geotechnical advice:

- the future growth potential of the tree;
- the minimum depth of overburden (i.e. that overlying the roof of the proposed structure) required for retention in situ to ensure the survival of the tree and its stability against the wind;
- the potential for vibration-induced granular flow within the retained overburden, caused by the undermining process, to destabilize the tree through reduced root adhesion;
- the mass of the tree and of the retained overburden;

Copyright British Standards Institution
Provided by IHS under license with BSI - Uncontrolled Copy
No reproduction or networking permitted without license from IHS
Licensee=Atkins Global /5975177002, User=Dale, Thomas
Not for Resale, 04/19/2012 06:22:27 MDT

- the potential for ponding (i.e. perched water table) and the need for a drainage/runoff control system;
- the potential for adverse affects on local soil hydrology, and the possible impact of these on tree health.

7.7 Underground and above-ground utility apparatus

7.7.1 Mechanical trenching for the installation of underground apparatus and drainage severs any roots present and can change the local soil hydrology in a way that adversely affects the health of the tree. For this reason, particular care should be taken in the routeing and methods of installation of all underground apparatus. Wherever possible, apparatus should be routed outside RPAs. Where this is not possible, it is preferable to keep apparatus together in common ducts. Inspection chambers should be sited outside the RPA.

7.7.2 Where underground apparatus is to pass within the RPA, detailed plans showing the proposed routeing should be drawn up in conjunction with the project arboriculturist. In such cases, trenchless insertion methods should be used (see Table 3), with entry and retrieval pits being sited outside the RPA. Provided that roots can be retained and protected in accordance with **7.2.2**, excavation using hand-held tools (see **7.2.1**) might be acceptable for shallow service runs.

NOTE The suitability of these for differing applications is summarized in Table 3.

Table 3 **Trenchless solutions for differing utility apparatus installation requirements**

Method	Accuracy	Bore dia. [A]	Max. sub. [B] length	Applications	Not suitable for
	mm	mm	m		
Microtunnelling	<20	100 to 300	40	Gravity-fall pipes, deep apparatus, watercourse/ roadway undercrossings	Low-cost projects due to relative expense
Surface-launched directional drilling	≈100	25 to 1 200	150	Pressure pipes, cables including fibre optic	Gravity-fall pipes, e.g. drains and sewers [C]
Pipe ramming	≈150	150 to 2 000	70	Any large-bore pipes and ducts	Rocky and other heavily obstructed soils
Impact moling [D]	≈50 [E]	30 to 180 [F]	40	Gas, water and cable connections, e.g. from street to property	Any application that requires accuracy over distances in excess of 5 m

[A] Dependent on strata encountered.

[B] Maximum subterranean length.

[C] Pit-launched directional drilling can be used for gravity fall pipes up to 20 m subterranean length.

[D] Impact moling (also known as thrust-bore) generally requires soft, cohesive soils.

[E] Substantial inverse relationship between accuracy and distance.

[F] Figures given relate to single pass: up to 300 mm bore achievable with multiple passes.

Copyright British Standards Institution
Provided by IHS under license with BSI - Uncontrolled Copy
No reproduction or networking permitted without license from IHS
Licensee=Atkins Global /5975177002, User=Dale, Thomas
Not for Resale, 04/19/2012 06:22:27 MDT

7.7.3 Above-ground apparatus (including CCTV cameras and lighting) should be sited to avoid the need for detrimental tree pruning. In this regard, the current and future crown size of the tree should be assessed. Tree branches can be pruned back with care to provide space, though it is not appropriate for repetitive and significant tree work to be an initial design solution unless this is a suitable management outcome for the tree. Pruning should be undertaken in accordance with BS 3998:2010.

8 Site works, landscape operations and management

NOTE BS 4428:1989 contains recommendations and guidance on general landscape operations, with sections on preliminary investigations, drainage, grading and cultivation, tree planting, and woodland planting. A new British Standard, BS 8545, is currently in preparation to provide detailed guidance on trees from nursery through to independence in the landscape.

8.1 General

The general treatment of areas around newly planted and existing trees should allow for adequate infiltration of water and free gas exchange, reduction of water evaporation and the retention of an open soil structure to encourage root growth. Care should be taken to ensure that grass or weed growth does not compete with young root growth by intercepting available water supply. Care should also be taken to avoid the risk of damage to the stems of young trees from future strimming or mowing operations. An area with a radius of at least 500 mm from the stem of newly planted trees should therefore be kept free from competing vegetation by chemical weed control or by the more environmentally friendly option of mulching (see **8.5**).

NOTE 1 Soft landscape finishes, including mulch and cultivated beds, will generally provide more favourable conditions for young tree establishment than most hard surfaces or grass. The use of ground-cover shrubs with an appropriate organic mulch is particularly beneficial: this treatment suppresses weeds, reduces maintenance, discourages intrusion and maintains a permeable open soil structure.

NOTE 2 BS 4428:1989 provides recommendations for the treatment of soft surfaces, but excludes hard surfaces.

8.2 Drainage

New development can have an effect on the existing drainage pattern and ground water levels of a site, due to level changes, increased areas of hard surface and new drainage installations. The root systems of mature trees do not generally adapt as well as younger specimens to alterations to groundwater. Expert advice on both drainage and trees should be taken where groundwater conditions are liable to change.

NOTE It is both good practice and, in many cases, a regulatory requirement to maintain existing groundwater conditions within, and reduce run-off from, a development site. This can be achieved, for example, through the use of permeable hard surfaces and techniques associated with sustainable urban drainage systems (SUDS). Such techniques can be designed and implemented to benefit both existing and new trees. (SUDS water might need to be treated/filtered and/or tree rooting areas protected from direct contamination in risk areas.)

8.3 Topsoil quality and amelioration

8.3.1 The quality of topsoil is a critical factor for the establishment and growth of new planting or seeding, and should be assessed by a competent person for depth, structure, texture and content. If there is any doubt regarding the suitability of soil to be used as a growing medium, appropriate samples should

Copyright British Standards Institution
Provided by IHS under license with BSI - Uncontrolled Copy
No reproduction or networking permitted without license from IHS
Licensee=Atkins Global /5975177002, User=Dale, Thomas
Not for Resale, 04/19/2012 06:22:27 MDT

be analysed by a specialist soil laboratory for horticultural/landscape use, with particular reference to nutrients, organic content and any potential toxic materials or other contaminants. The report should include an assessment of suitability and any recommendations for appropriate remedial work, including the need for further specialist site investigation if necessary. Imported topsoil to be used in planting or seeding operations should be from a source approved by a competent person, samples should be submitted for analysis, and deliveries should be certified and verified for their consistency with approved samples.

8.3.2 Topsoil depths should be appropriate for, and may vary according to, the type and size of planting or seeding to be undertaken.

8.4 Soil compaction and remediation measures

*COMMENTARY ON **8.4***

Soil that has been compacted will not provide suitable conditions for the survival and growth of vegetation, whether existing or new, and is a common cause of post-construction tree loss on development sites. Compacted soil will adversely affect drainage, gas exchange, nutrient uptake and organic content, and will seriously impede or restrict root growth. The risk of soil compaction is greatest in soils with a significant clay content and in wet conditions. It can result from temporary or short-term loadings, such as the passage of a single vehicle, or from longer-term construction activities, including materials storage.

Soil compaction should be avoided around existing vegetation, including trees, and in areas where new planting or seeding is proposed. Where soil compaction has occurred in the vicinity of existing trees, arboricultural advice should be taken before carrying out any remedial or other works within RPAs to mitigate risk of further damage to roots. Remedial works may include sub-soil aeration using compressed air, and the addition of other materials, preferably of a bulky, organic nature (but excluding peat), to improve structure. Heavy mechanical cultivation such as ploughing or rotavation should not occur within the RPA. Any cultivation operations should be undertaken carefully by hand in order to minimize damage to the tree, particularly the roots. Decompaction measures include forking, spiking, soil augering and tilthed radial trenching. Care should be taken during such operations to minimize the risk of further damage to tree roots.

8.5 Use of mulch

NOTE Further guidance on mulching is given in BS 3998:2010.

8.5.1 Open soil and shrub planting areas around newly planted trees should be mulched to inhibit weed growth, reduce groundwater evaporation, resist and mitigate soil compaction and reduce maintenance requirements, whilst allowing gas exchange and water penetration to roots. The mulch material should be weed-free, easy to apply, containable within the area of application and readily available. The choice of material will be informed by local availability of materials, site characteristics and aesthetic requirements. The mulch should be periodically replenished as it decomposes so that it does not become depleted, and ideally when the soil is warm and moist.

8.5.2 The materials that may be used for mulching include coarsely divided plant matter, such as well-composted wood chip, pulverized bark, leaf mould or green waste conforming to PAS 100, and these may be combined with well-rotted animal manure. If the sole intention is to conserve moisture, a layer of gravel or well-secured sheets of material such as permeable geotextile fabric may be used, and may be covered for cosmetic purposes. Any such sheets should be maintained to avoid damage to the tree (e.g. by clogging, weed growth, restriction of air movement or constriction of the stem).

Copyright British Standards Institution
Provided by IHS under license with BSI - Uncontrolled Copy
No reproduction or networking permitted without license from IHS
Licensee=Atkins Global /5975177002, User=Dale, Thomas
Not for Resale, 04/19/2012 06:22:27 MDT

8.5.3 The mulched area should extend over as much of the root system as can be allowed by other site-usage requirements. The depth of an organic mulch should not be so much as to inhibit aeration of the root system (normally no more than 100 mm). The area around the tree should be well-watered prior to the application of mulching material and the mulch should be periodically replenished as it decomposes, so that it does not become depleted.

NOTE Mulches that retain water encourage the development of roots near the soil surface and in the mulch itself. This can become a disadvantage owing to desiccation if the mulch is removed or not replenished.

8.5.4 Mulches should be kept away from direct contact with the bark of the stem, or of major roots, since this might encourage infection by pathogens by maintaining wet conditions.

NOTE Although, by improving the soil texture and acting as a buffer for rainfall, mulches generally help to prevent extremes of soil wetness and dryness, they can prolong waterlogging on sites where drainage is seriously impeded. This in turn can harm tree roots and make them more susceptible to certain pathogens such as Phytophthora *spp.*

8.6 Hard surfaces

NOTE Guidance on types of hard surface materials is given in Annex A.

8.6.1 Where surfaces adjacent to new tree planting locations are paved, the settlement of the soil in tree pits which occurs gradually after planting can cause movement of the paved area, including the partial collapse or instability of paving or disruption of flexible surfaces, where these are laid over prepared pits. Adjacent paving should therefore be retained and supported by a conventional edging and sub-base set at a distance where it is unlikely to be affected by settlement. Where this is not feasible, the outer edges of the backfilled area of the tree pit should be treated as a transition zone, using interlocking surface reinforcement grids backfilled with a flexible surface dressing of a permeable, granular material (e.g. gravels, shingles, other aggregates) which will allow for minor movement and can be topped up if required.

8.6.2 Where load-bearing paving is to be laid over pits, it should:

a) incorporate a below ground structural system; or

b) incorporate a purpose-designed tree grille with appropriate support around the edges; or

c) utilize structural soil from an approved source (i.e. a composite material that is certified as capable of enabling root growth and development while supporting likely surface loadings); or

d) be laid when the soil has settled and the level made good.

8.6.3 Due allowance should be made for the future growth of stem and roots of a tree when determining the finished dimensions and the design of edge or kerb treatments of tree pits and planted areas. Where necessary, precautions should be taken at the time of planting to limit future surface distortion near trunks, e.g. by the use of technical solutions such as root deflectors.

8.6.4 Where there is a risk of damage to the tree arising from intrusion within the tree planting station area (e.g. by vehicles in car parks), an above-ground barrier, such as bollards or fencing, should be incorporated into the design to provide appropriate physical protection.

Copyright British Standards Institution
Provided by IHS under license with BSI - Uncontrolled Copy
No reproduction or networking permitted without license from IHS
Licensee=Atkins Global /5975177002, User=Dale, Thomas
Not for Resale, 04/19/2012 06:22:27 MDT

8.6.5 Where there is risk of a tree pit receiving surface water run-off that might be contaminated by de-icing salt, either species that are known to be sensitive to salt damage should be avoided, or impermeable paving should be designed and laid to fall away from the pit.

NOTE Contamination by fuel spillages, or other materials that might be toxic or harmful to trees, can be mitigated by the incorporation of hydrocarbon capture systems in the drainage system design.

8.7 Use of herbicides

The use of herbicides in the vicinity of existing trees should be appropriate for the type of vegetation to be killed, and all instructions, warnings and other relevant information from manufacturers should be strictly observed and followed. Care should be taken to avoid any damaging effects upon existing plants and trees to be retained, species to be introduced, and existing sensitive habitats, particularly those associated with aquatic or drainage features.

NOTE Attention is drawn to the Control of Pesticides Regulations 1986, as amended [11], the Control of Substances Hazardous to Health Regulations 1994, as amended [12], and HSE publication INDG 257 [13]. Guidance is also available from the Pesticides Safety Directorate (www.pesticides.gov.uk) [viewed 2012-03-26].

8.8 Tree management

8.8.1 Pre-development tree work

NOTE Consideration could be given to the reuse of wood from felled trees. Guidance on the disposal, utilization and retention of arisings is given in BS 3998:2010.

8.8.1.1 Once a layout for the development area has been finalized, an arboriculturist should review the relationship of the development to the trees, and should prepare a schedule of tree works listing all the trees that require work (by number), accompanied by a plan showing where each tree is located.

8.8.1.2 The schedule of works should include:

a) trees for removal to enable development;

b) remedial tree works, including those required to establish acceptable levels of risk and management in the context of the proposed land use;

c) access facilitation pruning;

d) pre-emptive root pruning.

8.8.1.3 The schedule of works should be accompanied by a detailed specification prepared in accordance with BS 3998:2010.

8.8.2 Working within the root protection area (RPA)

8.8.2.1 Care should be taken to ensure during tree removal or remedial work that damage to the retained trees and/or disturbance to the RPA is avoided. Precautions should include dismantling techniques to reduce the risk of accidental damage, and ground protection measures where excessive pedestrian movements or use of plant and machinery might lead to compaction.

8.8.2.2 If temporary access is required for plant or vehicles within the RPA, this should be provided by means of temporary ground protection (see **6.2**).

NOTE In all cases, the objective is to avoid compaction of the soil, which can arise from the single passage of a heavy vehicle, especially in wet conditions, so that tree root functions remain undamaged.

Copyright British Standards Institution
Provided by IHS under license with BSI - Uncontrolled Copy
No reproduction or networking permitted without license from IHS
Licensee=Atkins Global /5975177002, User=Dale, Thomas
Not for Resale, 04/19/2012 06:22:27 MDT

8.8.2.3 To avoid adverse impact on retained trees, stumps to be removed within RPAs should not be dug or pulled out but should be ground out.

8.8.3 Post-development management: existing trees

A programme of inspections to advise on any necessary work to retained trees should be drawn up in conjunction with an arboriculturist. This programme might include recommendations for frequency of inspection and/or proposals for tree work [see Note to **5.3.4**c)], and should take the form of a management plan. A copy of this plan should be supplied to all parties with an interest in future site management.

NOTE 1 Trees growing on a site before development takes place can, if adversely affected, be in decline over a period of several years before they die.

NOTE 2 Where the trees in question are subject to legal, planning or other regulatory controls, the appropriate authority needs to be informed and any necessary agreements obtained prior to work being undertaken.

8.8.4 Post-development management: new plantings

8.8.4.1 Regular maintenance of newly planted trees is of particular importance for at least three years during the critical post-planting period and might, where required by site conditions, planning requirements or legal agreement, be for 5 years or more. A detailed maintenance schedule covering this period should be prepared in conjunction with the landscape design proposals, and appropriate arrangements made for its implementation.

NOTE Maintenance operations would normally include weed control and watering as necessary, inspection and adjustment of support systems and monitoring of growth. Formative pruning might also be required to achieve desired effects or to provide for access or clearance.

8.8.4.2 Defects that become apparent during the maintenance period should be addressed by appropriate remedial works (including replacement planting where necessary) as advised by a competent person.

Copyright British Standards Institution
Provided by IHS under license with BSI - Uncontrolled Copy
No reproduction or networking permitted without license from IHS
Licensee=Atkins Global /5975177002, User=Dale, Thomas
Not for Resale, 04/19/2012 06:22:27 MDT

Annex A (informative) General advice for other interested parties

NOTE This annex contains general advice that is expected to be of use to land managers, contractors, planners, statutory undertakers, surveyors, and all others interested in harmony between trees and construction.

A.1 Avoiding damage by trees to structures

A.1.1 General

Buildings need to be designed and constructed to accommodate the current and potential future influence of existing and removed vegetation, as well as planned new planting.

In some situations, trees and vegetation can adversely affect structures either by direct action (see **A.1.2**) or by indirect action (see **A.1.4**).

A.1.2 Direct damage by trees to structures

Trees can cause direct damage to structures by:

a) the disruption of underground utility apparatus;

b) displacement, lifting or distorting;

c) the impact of branches with the superstructure;

d) structural failure of the tree.

The potential for direct damage needs to be considered throughout the design and construction process.

The growth of the base of the stem or of roots near the surface exerts relatively small forces. Whilst paving slabs or low boundary walls can be lifted or pushed aside easily, heavier or stronger structures are more likely to withstand these forces without damage, as the root distorts around the obstruction before damage occurs. The greatest risk of direct damage occurs close to the tree from the incremental growth of the main stem and the roots, and diminishes rapidly with distance.

It is advisable that new tree planting is kept at distances from structures of at least those in Table A.1.

Where construction work is to take place near to existing trees, allowance for future tree growth needs to be factored in to the construction process in order to protect the structure. For example:

1) walls or structural slabs need to bridge over roots allowing sufficient clearance for future growth;

2) paving and other surfaces need to be laid on a flexible base to allow movement and to facilitate relaying if distortion becomes excessive.

Water leaking from damaged drains and sewers encourages localized root growth; roots are then likely to enter a drain or sewer through the defect and proliferate, causing blockage and an enlarging of the initial defect. Provided they are further from trees than the distances stipulated in Table A.1, intact drains are not likely to suffer direct damage and will not attract roots. Damage to drains and sewers can be avoided by:

i) re-routeing to conform to Table A.1;

ii) ensuring watertight joints;

iii) in clay soils, use of flexible materials and/or joints to accommodate movement;

iv) not using perforated land drains near trees.

Copyright British Standards Institution
Provided by IHS under license with BSI - Uncontrolled Copy
No reproduction or networking permitted without license from IHS
Licensee=Atkins Global /5975177002, User=Dale, Thomas
Not for Resale, 04/19/2012 06:22:27 MDT

Allowance needs to be made for the swaying of stem and branches during storm conditions. Branches which are liable to strike the structure need to be removed or pruned back to a suitable branching point as appropriate (see BS 3998:2010).

Table A.1 **Minimum distance between young trees or new planting and structure to avoid direct damage to a structure from future tree growth**

Type of structure	Minimum distance between young trees or new planting and structure, in metres (m)		
	Stem dia. <300 mm [A)]	Stem dia. 300 mm to 600 mm [A)]	Stem dia. >600 mm [A)]
Buildings and heavily loaded structures	—	0.5	1.2
Lightly loaded structures such as garages, porches etc.	—	0.7	1.5
Services			
<1 m deep	0.5	1.5	3.0
>1 m deep	—	1.0	2.0
Masonry boundary walls	—	1.0	2.0
In-situ concrete paths and drives	0.5	1.0	2.5
Paths and drives with flexible surfaces or paving slabs	0.7	1.5	3.0

[A)] Diameter of stem at 1.5 m above ground level at maturity

A.1.3 Allowance for future growth

Where the installation of paths or light structures such as walls is unavoidable near to trees, the design and construction specification needs to take account of future growth.

If it is necessary to build a wall or similar structure over a root greater than 50 mm diameter, provision for future diameter growth needs to be made by surrounding the root with uncompacted sharp sand, void-formers, or other flexible fill materials, and by laying an adequately reinforced lintel or raft over the surface.

A.1.4 Indirect damage by trees to structures

Damage by indirect action can occur in shrinkable soils such as clay when vegetation takes moisture from the ground, causing a significant volume change resulting in ground movement. Non-cohesive soils such as sand and gravel are not shrinkable, as their volume does not alter with a change in moisture content, and so structures on these soils are unaffected by indirect damage.

Buildings and drainage need to be protected against the effects of subsidence and heave.

- Subsidence takes place when water is withdrawn from the soil causing it to shrink.
- Heave takes place when previously dehydrated soil takes up water and swells. This can happen after the felling or removal of vegetation. It can also occur beneath a building if roots are severed. These activities make heave more prevalent in new build construction than older buildings. Heave is three-dimensional, exerting both vertical and lateral pressures on structures.

Detailed guidance is given in NHBC Standards Chapter 4.2 [14].

Copyright British Standards Institution
Provided by IHS under license with BSI - Uncontrolled Copy
No reproduction or networking permitted without license from IHS
Licensee=Atkins Global /5975177002, User=Dale, Thomas
Not for Resale, 04/19/2012 06:22:27 MDT

A.1.5 Types of hard surface materials and their suitability in proximity to trees

*NOTE Materials in common use include those described in **A.1.5.1** to **A.1.5.4**. Other materials are available.*

A.1.5.1 Washed gravel

Washed gravel retains its porosity unless excessively consolidated, and is particularly useful where changes of level occur or an irregular shape is needed around the stem of a tree. Gravel is easily renewed or topped up. Although weeds might become established, they can be controlled by chemical or mechanical means. However, gravel is rarely suitable for use where there is vehicle or pedestrian traffic, e.g. in residential areas. Materials with a high fines content, such as self-binding gravels or hoggin, ought not to be used due to their almost impermeable texture when consolidated.

A.1.5.2 Paving slabs and block pavers

Paving slabs and block pavers are available with built-in infiltration spaces between the slabs or blocks. These are ideal, but need to be laid dry-jointed on a sharp sand or coarse aggregate no-fines foundation to allow air and moisture to penetrate to the rooting area.

A.1.5.3 In-situ concrete

As in-situ concrete forms an impermeable surface, falls and openings need to be provided for water and air to enter the soil (the necessary liner can be penetrated through the falls or openings once the concrete has set). This can be achieved by forming 50 mm diameter holes in the construction of a slab at regular spacings of 300 mm to 600 mm (as determined by an engineer) and backfilling the resulting holes with no-fines gravel or aggregate. A high standard of materials and workmanship is needed if frost damage and excessive wear are to be avoided.

A.1.5.4 Bitumen paving and resin-bonded gravels

These surfaces can consist of porous or impermeable material. As the interstices in unsealed tar paving will eventually become blocked by fines, it is advisable for such surfaces to be laid following the same principles as those for impermeable surfaces, therefore its use within the RPA also needs to be restricted to the 20% RPA recommendation (**7.4.2.3**).

A.2 Avoiding damage to trees

A.2.1 General

Trees that have good health and stability are well adapted to their surroundings. Any development activity which affects the adaptation of trees to a site could be detrimental to their health, future growth and safety. Tree species differ in their ability to tolerate change, but all tend to become less tolerant after they have reached maturity or suffered previous damage or physiological stress. Planning and subsequent site management aims need to minimize the effect of change.

The part of a tree most susceptible to damage is the root system, which, because it is not immediately visible, is frequently ignored. Damage to, or death of, the root system affects the health, growth, life expectancy and safety of the entire tree. The effects of such damage might only become evident several years later. Damage can be the result of a number of minor but compounding factors that accumulate over time. Materials such as uncured concrete, diesel oil and vehicle washings can all damage roots and lead to adverse impacts on the tree.

Copyright British Standards Institution
Provided by IHS under license with BSI - Uncontrolled Copy
No reproduction or networking permitted without license from IHS
Licensee=Atkins Global /5975177002, User=Dale, Thomas
Not for Resale, 04/19/2012 06:22:27 MDT

Damage to the stem and branches of a tree is not usually sufficient to kill the tree directly, but can make it unsafe by affecting the dynamics and growth of the tree, or by initiating long-term decay. Such damage can also be disfiguring. The attachment of notice boards, cables and other utility apparatus can all damage trees, as can using trees as anchors for winching.

A.2.2 Extent and form of the root system

Within a short distance of the stem, the roots are highly branched, so as to form a network of small-diameter woody roots, which can extend radially for a distance much greater than the height of the tree, except where impeded by unfavourable conditions. All parts of this system bear a mass of fine, non-woody absorptive roots, typically concentrated within the uppermost 600 mm of the soil.

The root system does not generally show the symmetry seen in the branch system. The development of all roots is influenced by the availability of water, nutrients, oxygen and soil penetrability. As far as these conditions allow, the root system tends to develop sufficient volume and area to provide physical stability.

The uptake of water and mineral nutrients by the root system takes place via the fine non-woody roots (typically less than 0.5 mm diameter) and associated beneficial fungi (mycorrhizae). Their survival and functioning, which are essential for the health of the tree as a whole, depend on the maintenance of favourable soil conditions. The fine roots are short-lived, with the majority dying each winter and new ones developing in response to the needs of the tree.

All parts of the root system, but especially the fine roots, are vulnerable to damage. Once roots are damaged, water and nutrient uptake is restricted until new ones have grown. Mature trees recover slowly, if at all, from damage to their woody roots.

Copyright British Standards Institution
Provided by IHS under license with BSI - Uncontrolled Copy
No reproduction or networking permitted without license from IHS
Licensee=Atkins Global /5975177002, User=Dale, Thomas
Not for Resale, 04/19/2012 06:22:27 MDT

Annex B (informative) Trees and the planning system

Under the UK planning system, local authorities have a statutory duty to consider the protection and planting of trees when granting planning permission for proposed development. The potential effect of development on trees, whether statutorily protected (e.g. by a tree preservation order or by their inclusion within a conservation area) or not, is a material consideration that is taken into account in dealing with planning applications. Where trees are statutorily protected, it is important to contact the local planning authority and follow the appropriate procedures before undertaking any works that might affect the protected trees.

The nature and level of detail of information required to enable a local planning authority to properly consider the implications and effects of development proposals varies between stages and in relation to what is proposed. Table B.1 provides advice to both developers and local authorities on an appropriate amount of information. The term "minimum detail" is intended to reflect information that local authorities are expected to seek, whilst the term "additional information" identifies further details that might reasonably be sought, especially where any construction is proposed within the RPA.

Table B.1 **Delivery of tree-related information into the planning system**

Stage of process	Minimum detail	Additional information
Pre-application	Tree survey	Tree retention/removal plan (draft)
Planning application	Tree survey (in the absence of pre-application discussions)	Existing and proposed finished levels
	Tree retention/removal plan (finalized)	Tree protection plan
	Retained trees and RPAs shown on proposed layout	Arboricultural method statement – heads of terms
	Strategic hard and soft landscape design, including species and location of new tree planting	Details for all special engineering within the RPA and other relevant construction details
	Arboricultural impact assessment	
Reserved matters/ planning conditions	Alignment of utility apparatus (including drainage), where outside the RPA or where installed using a trenchless method	Arboricultural site monitoring schedule
	Dimensioned tree protection plan	Tree and landscape management plan
	Arboricultural method statement – detailed	Post-construction remedial works
	Schedule of works to retained trees, e.g. access facilitation pruning	Landscape maintenance schedule
	Detailed hard and soft landscape design	

Copyright British Standards Institution
Provided by IHS under license with BSI - Uncontrolled Copy
No reproduction or networking permitted without license from IHS
Licensee=Atkins Global /5975177002, User=Dale, Thomas
Not for Resale, 04/19/2012 06:22:27 MDT

Annex C (normative) Measurement of tree stems

Diameters of single stem trees on level ground should be measured in accordance with Figure C.1a). Diameters of other commonly encountered tree stems should be measured in accordance with Figures C.1b) to C.1f).

NOTE The thick black line indicates where the measurement is taken.

Figure C.1 **Measurement of tree stems**

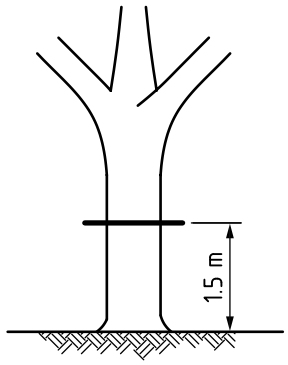

a) Stem diameter measured at 1.5 m above ground level

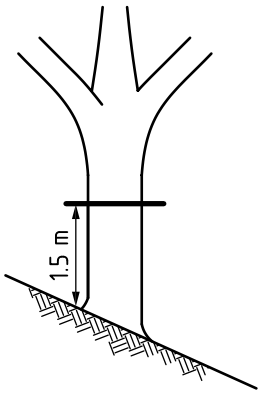

b) Measurement on sloping ground

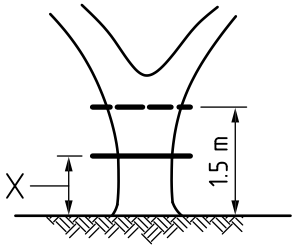

c) Trees with low branching measured at narrowest point below the fork

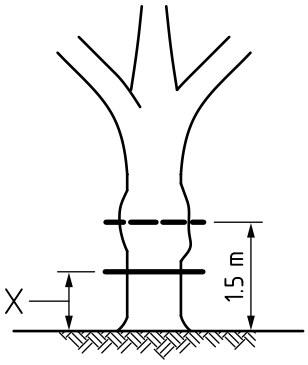

d) Measurement of stem with irregular swelling made at the narrowest point below the swelling

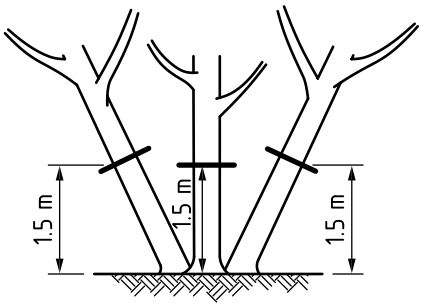

e) Measurement of a multi-stemmed tree

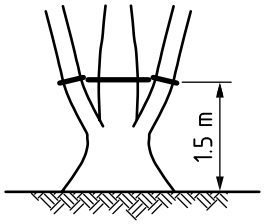

f) Measurement of a tree with more than one stem at 1.5 m above ground level

Key

X Height varies

Copyright British Standards Institution
Provided by IHS under license with BSI - Uncontrolled Copy
No reproduction or networking permitted without license from IHS
Licensee=Atkins Global /5975177002, User=Dale, Thomas
Not for Resale, 04/19/2012 06:22:27 MDT

Annex D (normative) Root protection area

The RPAs given in Table D.1 should be used for single stem trees and the equivalent resultant combined stem diameter for multi-stemmed trees.

Table D.1 **Root protection areas**

Single stem diameter	Radius of nominal circle	RPA	Single stem diameter	Radius of nominal circle	RPA
mm	m	m^2	mm	m	m^2
75	0.90	3	675	8.10	206
100	1.20	5	700	8.40	222
125	1.50	7	725	8.70	238
150	1.80	10	750	9.00	255
175	2.10	14	775	9.30	272
200	2.40	18	800	9.60	290
225	2.70	23	825	9.90	308
250	3.00	28	850	10.20	327
275	3.30	34	875	10.50	346
300	3.60	41	900	10.80	366
325	3.90	48	925	11.10	387
350	4.20	55	950	11.40	408
375	4.50	64	975	11.70	430
400	4.80	72	1 000	12.00	452
425	5.10	81	1 025	12.30	475
450	5.40	92	1 050	12.60	499
475	5.70	102	1 075	12.90	519
500	6.00	113	1 100	13.20	547
525	6.30	124	1 125	13.50	573
550	6.60	137	1 150	13.80	598
575	6.90	150	1 175	14.10	625
600	7.20	163	1 200	14.40	652
625	7.50	177	1 225	14.70	679
650	7.80	191	1 250+	15.00	707

*NOTE These figures are derived from the calculations described in **4.6**.*

Copyright British Standards Institution
Provided by IHS under license with BSI - Uncontrolled Copy
No reproduction or networking permitted without license from IHS
Licensee=Atkins Global /5975177002, User=Dale, Thomas
Not for Resale, 04/19/2012 06:22:27 MDT

Bibliography

Standards publications

For dated references, only the edition cited applies. For undated references, the latest edition of the referenced document (including any amendments) applies.

BS 4428:1989, *Code of practice for general landscape operations (excluding hard surfaces)*

BS 8545, *Young trees: from nursery through to independence in the landscape – Recommendations* [1)]

BS 1722-18, *Fences – Specification for steel mesh site perimeter temporary fencing systems*

PAS 100, *Specification for composted materials*

Other documents

[1] ROYAL INSTITUTION OF CHARTERED SURVEYORS. *Surveys of land buildings and utility services at scales of 1:500 and larger*. London: Royal Institution of Chartered Surveyors. ISBN 0854065393.

[1] GREAT BRITAIN. Hedgerows Regulations 1997. London: Office of Public Sector Information (formerly The Stationery Office).

[2] BUILDING RESEARCH ESTABLISHMENT. *Availability of sunshine*. CP75/75. Watford: Building Research Establishment, 1975.

[3] LITTLEFAIR, P. Site layout planning for daylight and sunlight: a guide to good practice. BR 209. Watford: Building Research Establishment, 2011.

[4] GREAT BRITAIN. Construction (Design and Management) Regulations 2007. London: The Stationery Office.

[5] GREAT BRITAIN. Construction (Design and Management) Regulations (Northern Ireland) 2007. London: The Stationery Office.

[6] COMMISSION FOR ARCHITECTURE AND THE BUILT ENVIRONMENT. *Does money grow on trees?* London: CABE, 2005.[2)]

[7] GREAT BRITAIN. Building Regulations 2010. London: The Stationery Office.

[8] GREAT BRITAIN. Building (Scotland) Regulations 2004, as amended. London: The Stationery Office.

[9] GREAT BRITAIN. Building Regulations (Northern Ireland) 2000. London: The Stationery Office.

[10] GREAT BRITAIN. Control of Pesticides Regulations 1986, as amended. London: HMSO.

[11] GREAT BRITAIN. Control of Substances Hazardous to Health Regulations 1994, as amended. London: HMSO.

[12] HEALTH AND SAFETY EXECUTIVE. *Pesticides – Use them safely*. INDG 257. London: HSE, 1997.

[13] NATIONAL HOUSE-BUILDING COUNCIL. *Building near trees*. NHBC Standards Chapter 4.2. Milton Keynes: NHBC, 2011. [3)]

1) In preparation. Title is provisional.

2) Printed copies of the full report are no longer available, but it can be downloaded at www.cabe.org.uk/publications/does-money-grow-on-trees [viewed 2012-03-26].

3) Available from TSO Bookshops or TSO Online Bookshop at www.tsoshop.co.uk/bookstore.asp [viewed 2012-03-26].

Copyright British Standards Institution
Provided by IHS under license with BSI - Uncontrolled Copy
No reproduction or networking permitted without license from IHS

Licensee=Atkins Global /5975177002, User=Dale, Thomas
Not for Resale, 04/19/2012 06:22:27 MDT

This page deliberately left blank

Copyright British Standards Institution
Provided by IHS under license with BSI - Uncontrolled Copy
No reproduction or networking permitted without license from IHS

Licensee=Atkins Global /5975177002, User=Dale, Thomas
Not for Resale, 04/19/2012 06:22:27 MDT

This page deliberately left blank

--`,,,````,,,```,````,,``````-`-`,,`,,`,`,,`---
Copyright British Standards Institution
Provided by IHS under license with BSI - Uncontrolled Copy
No reproduction or networking permitted without license from IHS
Licensee=Atkins Global /5975177002, User=Dale, Thomas
Not for Resale, 04/19/2012 06:22:27 MDT

British Standards Institution (BSI)

BSI is the independent national body responsible for preparing British Standards and other standards-related publications, information and services. It presents the UK view on standards in Europe and at the international level.

BSI is incorporated by Royal Charter. British Standards and other standardisation products are published by BSI Standards Limited.

Revisions

British Standards and PASs are periodically updated by amendment or revision. Users of British Standards and PASs should make sure that they possess the latest amendments or editions.

It is the constant aim of BSI to improve the quality of our products and services. We would be grateful if anyone finding an inaccuracy or ambiguity while using British Standards would inform the Secretary of the technical committee responsible, the identity of which can be found on the inside front cover. Similary for PASs, please notify BSI Customer Services.

Tel: +44 (0)20 8996 9001 Fax: +44 (0)20 8996 7001

BSI offers BSI Subscribing Members an individual updating service called PLUS which ensures that subscribers automatically receive the latest editions of British Standards and PASs.

Tel: +44 (0)20 8996 7669 Fax: +44 (0)20 8996 7001
Email: plus@bsigroup.com

Buying standards

You may buy PDF and hard copy versions of standards directly using a credit card from the BSI Shop on the website **www.bsigroup.com/shop.** In addition all orders for BSI, international and foreign standards publications can be addressed to BSI Customer Services.

Tel: +44 (0)20 8996 9001 Fax: +44 (0)20 8996 7001
Email: orders@bsigroup.com

In response to orders for international standards, BSI will supply the British Standard implementation of the relevant international standard, unless otherwise requested.

Information on standards

BSI provides a wide range of information on national, European and international standards through its Knowledge Centre.

Tel: +44 (0)20 8996 7004 Fax: +44 (0)20 8996 7005
Email: knowledgecentre@bsigroup.com

BSI Subscribing Members are kept up to date with standards developments and receive substantial discounts on the purchase price of standards. For details of these and other benefits contact Membership Administration.

Tel: +44 (0)20 8996 7002 Fax: +44 (0)20 8996 7001
Email: membership@bsigroup.com

Information regarding online access to British Standards and PASs via British Standards Online can be found at **www.bsigroup.com/BSOL**

Further information about British Standards is available on the BSI website at **www.bsi-group.com/standards**

Copyright

All the data, software and documentation set out in all British Standards and other BSI publications are the property of and copyrighted by BSI, or some person or entity that own copyright in the information used (such as the international standardisation bodies) has formally licensed such information to BSI for commerical publication and use. Except as permitted under the Copyright, Designs and Patents Act 1988 no extract may be reproduced, stored in a retrieval system or transmitted in any form or by any means – electronic, photocopying, recording or otherwise – without prior written permission from BSI. This does not preclude the free use, in the course of implementing the standard, of necessary details such as symbols, and size, type or grade designations. If these details are to be used for any other purpose than implementation then the prior written permission of BSI must be obtained. Details and advice can be obtained from the Copyright & Licensing Department.

Tel: +44 (0)20 8996 7070
Email: copyright@bsigroup.com

BSI

389 Chiswick High Road London W4 4AL UK

Tel +44 (0)20 8996 9001
Fax +44 (0)20 8996 7001
www.bsigroup.com/standards

raising standards worldwide™

Copyright British Standards Institution
Provided by IHS under license with BSI - Uncontrolled Copy
No reproduction or networking permitted without license from IHS

Licensee=Atkins Global /5975177002, User=Dale, Thomas
Not for Resale, 04/19/2012 06:22:27 MDT